Engineering Diagrams Set

HP 3000 Series III

(Products 32421A and 32435A)

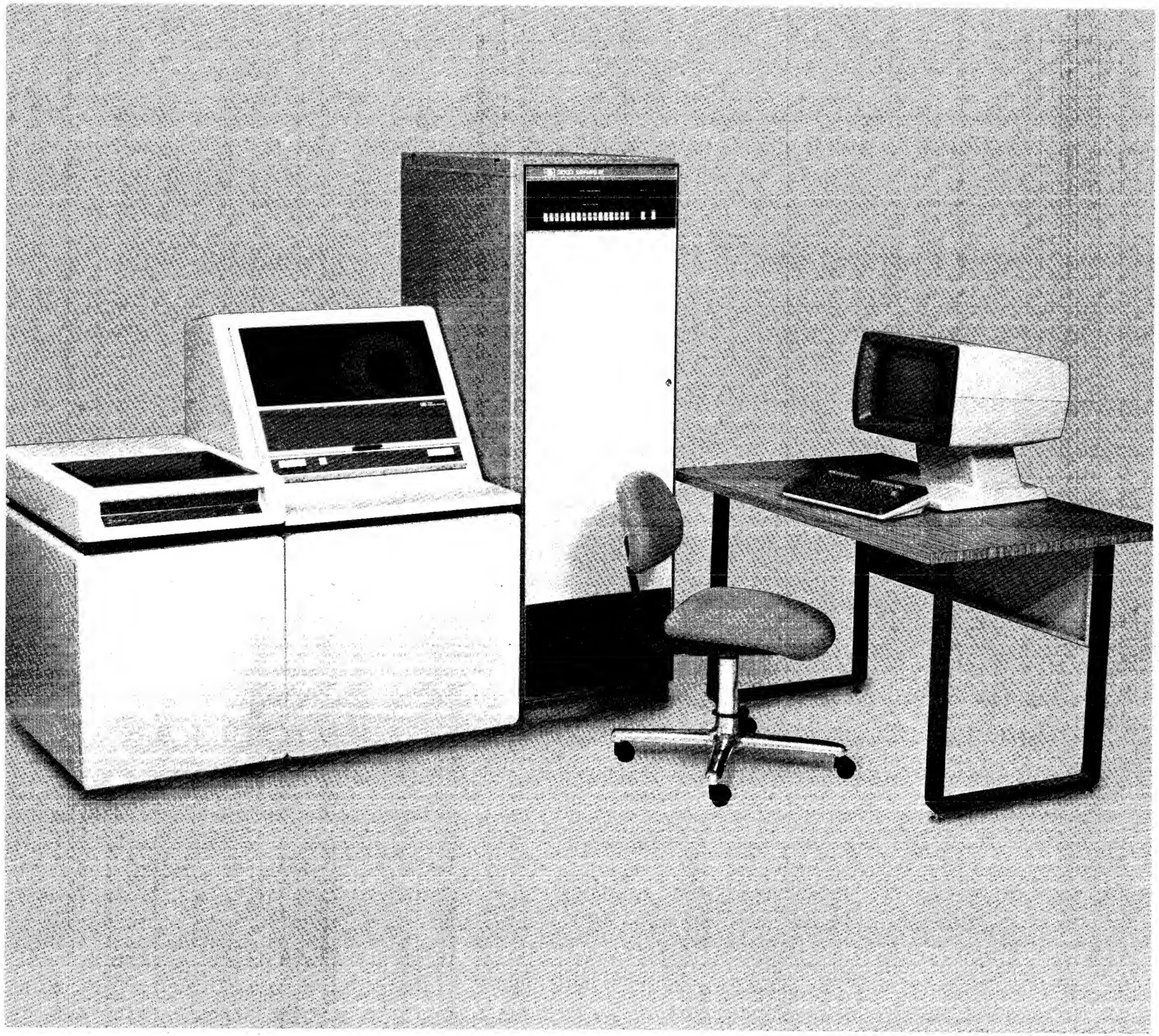

19447 Pruneridge Ave., Cupertino, California 95014

30000-90141
Index No. 3DIAG.050.30000-90141

Printed in U.S.A. 4/80

NOTICE

The information contained in this document is subject to change without notice.

HEWLETT-PACKARD MAKES NO WARRANTY OF ANY KIND WITH REGARD TO THIS MATERIAL, INCLUDING, BUT NOT LIMITED TO, THE IMPLIED WARRANTIES OF MERCHANTABILITY AND FITNESS FOR A PARTICULAR PURPOSE. Hewlett-Packard shall not be liable for errors contained herein or for incidental or consequential damages in connection with the furnishing, performance or use of this material.

This document contains proprietary information which is protected by copyright. All rights are reserved. No part of this document may be photocopied or reproduced without the prior written consent of Hewlett-Packard Company.

Copyright © 1980 by HEWLETT-PACKARD COMPANY

LIST OF EFFECTIVE PAGES

The list of effective pages gives the most recent date on which the technical material on any given page was altered. If a page is simply rearranged because of a technical change on a previous page, it is not listed as a changed page. Within the manual, changes are marked with a vertical bar in the margin.

All pages original issue.....APRIL 1980

PRINTING HISTORY

New editions incorporate all update material since the previous edition. Update packages, which are issued between editions, contain additional and replacement pages to be merged into the manual by the customer. The date on the title page changes only when a new edition is published. If minor corrections and updates are incorporated, then the manual is reprinted but neither the date on the title page nor the edition change.

First Printing.....APRIL 1980

GENERAL INFORMATION

This Engineering Diagrams Set provides schematics, component layouts, and signal and power distribution diagrams for the HP 3000 Series III Computer Systems.

Products 32421A and 32435A are included. Many of the diagrams are common to both. THOSE UNIQUE TO ONE OF THE PRODUCTS ARE LABELED ACCORDINGLY.

The Set is divided into four sections. Section 1 contains rack diagrams and power and signal wiring information. Diagrams and tables unique to the 32421A appear first, followed by those for the 32435A; diagrams and tables common to both products appear last.

Section II contains the schematics and component location diagrams for the CPU and Memory Modules. They appear in numerical order.

Section III contains I/O PCA diagrams, in numerical order.

Section IV contains individual power supply diagrams. Those for the 32421A appear first, followed by those for the 32435A.

NOTE

On some diagrams, a box containing dates appears in the upper right corner. THOSE DATES SHOULD BE IGNORED. Each PCA was examined for changes shortly before this set was printed in April 1980.

SECTION I - RACK DIAGRAMS/POWER AND SIGNAL WIRING LAYOUTS

CONTENTS

FIGURE or TABLE NO.	DESCRIPTION
Fig. 1-1	32421A Racking Plan
Fig. 1-2	32421A, Option 200, Racking Plan
Table 1-1	32421A PCA Slot Assignments
Table 1-2	32421A with 30418A Upgrade Kit, Assignments
Table 1-3	32421A with Option 200, Assignments
Table 1-4	32421A with Opt' 200 AND 30418A Kit, Assignments
Fig. 1-3	32421A Flat Cable Terminators
Fig. 1-4	32421A System Flat Cables
Fig. 1-5	32421A with Option 200, Flat Cable Terminators
Fig. 1-6	32421A with Option 200, System Flat Cables
Fig. 1-7	32421A Typical Interrupt Poll Cabling
Fig. 1-8	32421A CPU Bay Clock Jumpers and Terminators
Fig. 1-9	32421A I/O Bay Clock Jumpers and Terminators
Fig. 1-10	32421A Power Controls and Indicators
Table 1-5	32421A Power Control and Indicator Functions
Fig. 1-11	32421A DC Power Control Circuits
Fig. 1-12	32421A CPU Bay DC Wiring
Fig. 1-13	32421A I/O Bay DC Wiring
Fig. 1-14	32421A Peripheral and I/O Bay DC Wiring
Fig. 1-15	32421A CPU Bay AC Distribution
Fig. 1-16	32421A Auxiliary Cabinets' AC Distribution
Fig. 1-17	32421A Auxiliary Cabinets' AC Distribution, Cnt'd.
Fig. 1-18	The 32435A System
Fig. 1-19	32435A System with Option 200
Table 1-6	32435A PCA Slot Assignments
Fig. 1-20	32435A P09 Power Distribution PCA
Fig. 1-21	32435A P02 Power Distribution PCA
Fig. 1-22	32435A P07/P09 Wiring Diagram
Fig. 1-23	32435A P02/P41 Wiring Diagram
Fig. 1-24	32435A with Option 200, Flat Cable Terminators
Fig. 1-25	32435A with Option 200, System Flat Cables
Fig. 1-26	32435A CPU Bay Clock Jumpers and Terminators
Fig. 1-27	32435A I/O Bay Clock Jumpers and Terminators
Fig. 1-28	32435A Power Control and Status Panel
Table 1-7	32435A Power Control and Indicator Functions
Fig. 1-29	32435A CPU Wiring
Fig. 1-30	32435A DC Power Connections
Fig. 1-31	32435A AC Power Distribution
Fig. 1-32	32435A with Option 200, Cable Harness 30235-60007
Fig. 1-33	32435A with Option 200, Power Bus Connection
Table 1-8	CPU Backplane Signal Distribution List
Table 1-9	IOP Power Bus (Non-Memory Card Cage)
Table 1-10	Central Data Bus
Table 1-11	IOP Bus
Table 1-12	CIR Connector A8J1
Table 1-13	CIR Connector A8J2
Table 1-14	Multiplexer Channel Bus
Table 1-15	Port Controller Bus
Table 1-16	Selector Channel Bus
Table 1-17	Selector Channel Connector J1
Table 1-18	Selector Channel Connector J2
Table 1-19	Memory Connector J1
Table 1-20	Memory Connector J3
Table 1-21	Error Logging Interface Cable
Table 1-22	IOP Power Bus (Memory Card Cage)
Table 1-23	Mag Tape Interface Connector J2
Table 1-24	Mag Tape Interface Connector J3
Table 1-25	Mag Tape Interface to Tape Unit
Table 1-26	7920A/7925A Interface to Device Controller
Table 1-27	7920A/7925A Disc Controller Connector J2
Table 1-28	7920A/7925A Disc Controller Connector P2
Table 1-29	7920A/7925A Disc Controller Connector P3
Table 1-30	Disc Controller to 7920A/7925A Disc Drive

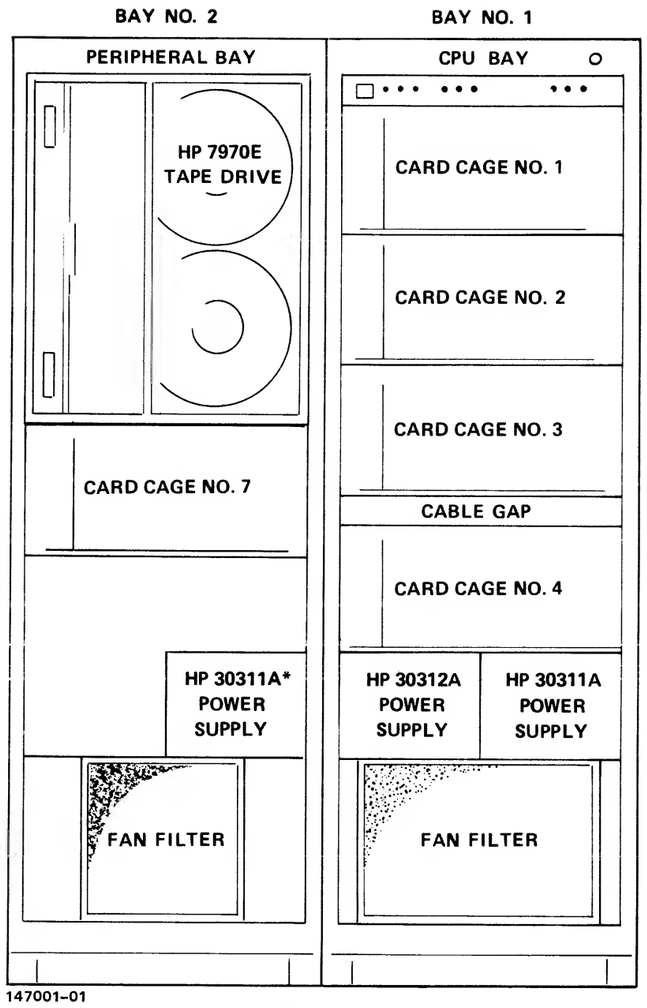

FRONT VIEW
(DOORS OMITTED FOR CLARITY)

* Optionally installed at the factory or field installed using the HP 30418A Upgrade Kit for 768K-word or 1024K-word memory.

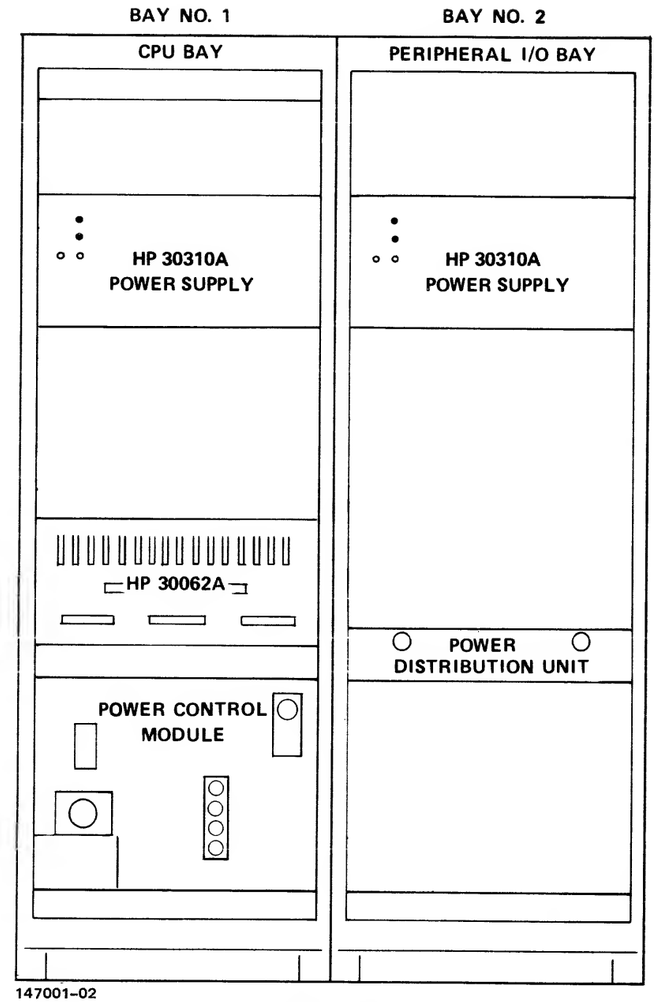

REAR VIEW
(DOORS REMOVED FOR CLARITY)

Figure 1-1. HP 3000 Series III (32421A) Racking Plan, Front and Rear Views

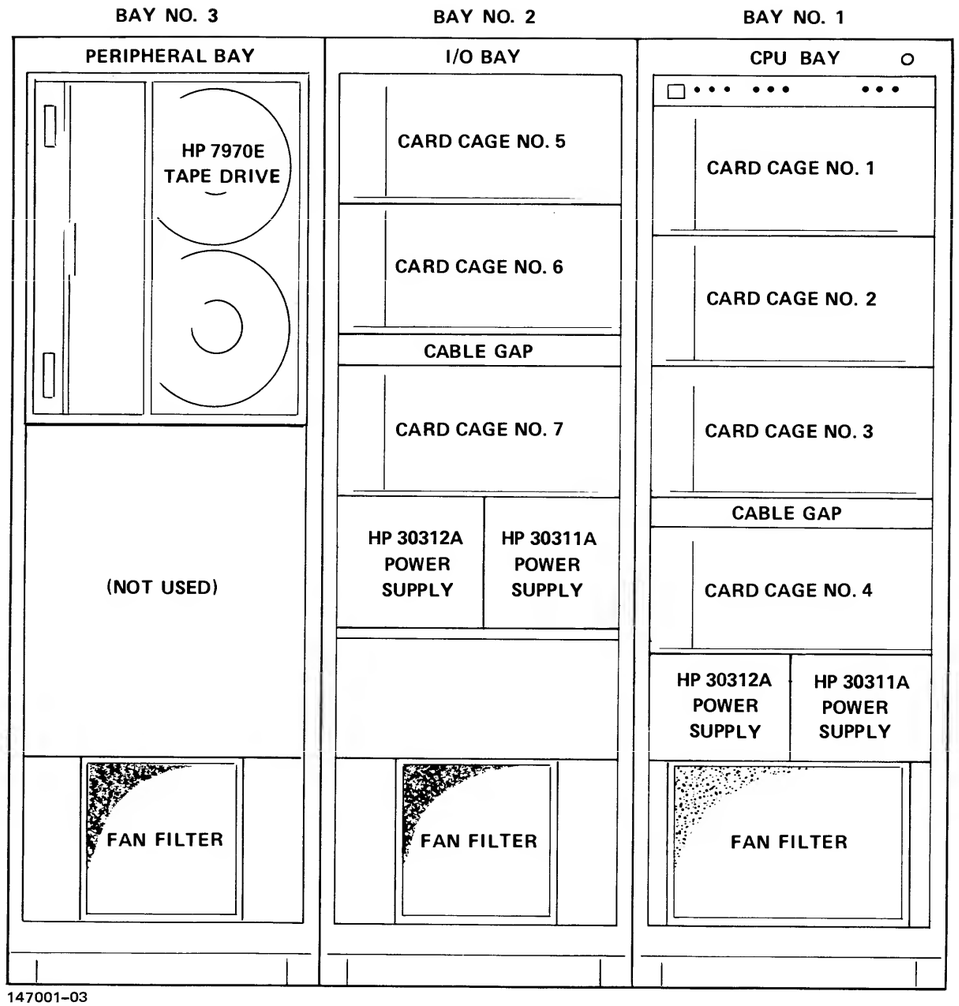

FRONT VIEW
(DOORS OMITTED FOR CLARITY)

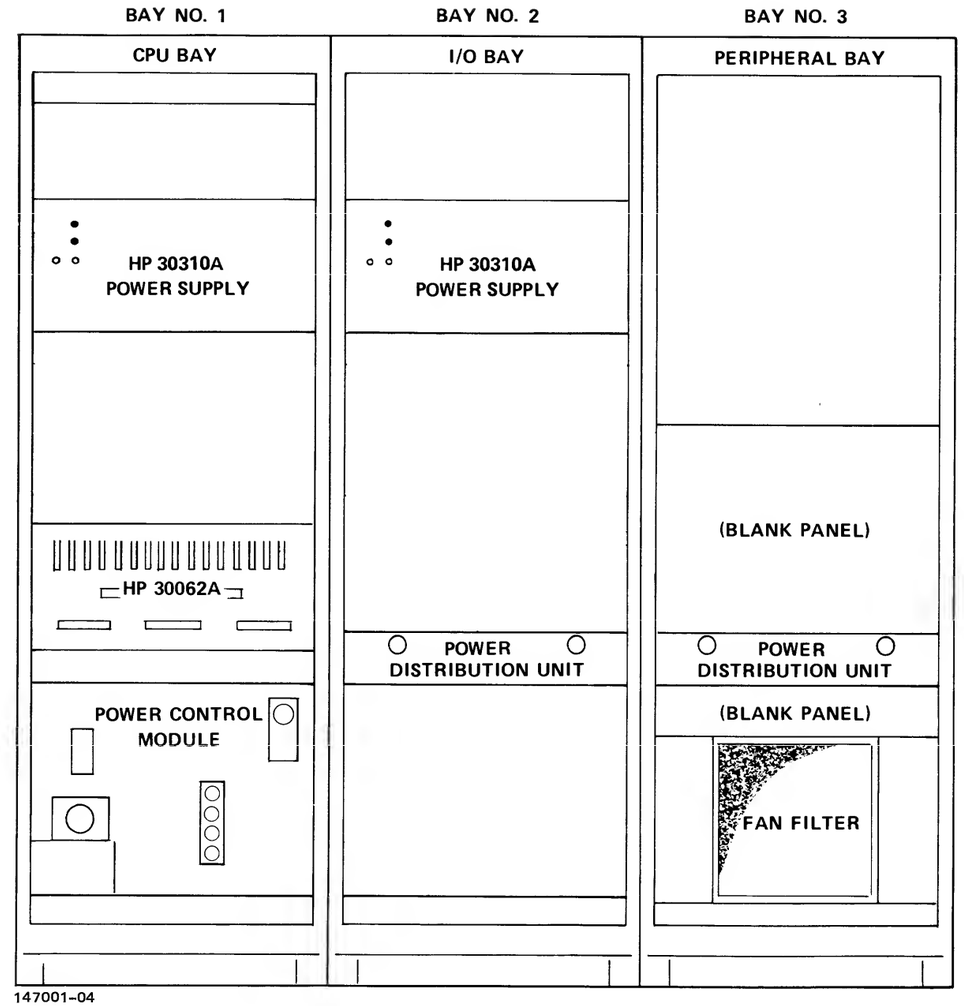

REAR VIEW
(DOORS REMOVED FOR CLARITY)

Figure 1-2. HP 3000 Series III (32421A), Option 200, Racking Plan, Front and Rear Views

Table 1-1. PCA Slot Assignments (32421A)

	SLOT	PRINTED CIRCUIT ASSEMBLY
CARD CAGE NO.1	A1	Reserved for maintenance panel PCA.
	A2	30012-60001 Extended Instruction Set
	A3	30003-60021 Read Only Memory
	A4	30003-60022 Skip and Special Field
	A5	30003-60003 Arithmetic and Logic Unit
	A6	30003-60004 R Bus
	A7	30003-60025 S Bus
	A8	30003-60006 Current Instruction Register
	A9	30003-60007 Module Control Unit
	A10	30003-60028 Input Output Processor
CARD CAGE NO.2	A1	30032-60001 Terminal Data Interface
	A2	30061-60001 Terminal Control Interface
	A3	Reserved for 204 Modem capability
	A4	30009-60002 Fault Logging Interface
	A5	
	A6	30008-60003 Memory Array (128K)
	A7	Available to add 128K
	A8	Available to add 128K
	A9	Available to add 128K
	A10	30007-60005 Memory Control and Logging
CARD CAGE NO.3	A1	Available for add-on memory
	A2	Available for add-on memory
	A3	Available for add-on memory
	A4	Available for add-on memory
	A5	Available for add-on memory
	A6	
	A7	30030-60020 Selector Channel Port Controller
	A8	30030-60021 Selector Channel Register
	A9	30030-60003 Selector Channel Control
	A10	30030-60011 Selector Channel Sequencer
CARD CAGE NO.4	A1	30036-60002 Multiplexer Channel
	A2	Available for programmed (SIO) or direct I/O.
	A3	Available for programmed (SIO) or direct I/O.
	A4	Available for programmed (SIO) or direct I/O.
	A5	30031-60001 System Clock
	A6	Interrupt Poll Jumper (IPJ) 30000-60001
	A7	30229-60001 7905A/20A/25A Interface
	A8	13037-60028 Disc Controller
	A9	13037-60024 Error Correction
	A10	13037-60001 Microprocessor

	SLOT	PRINTED CIRCUIT ASSEMBLY
CARD CAGE NO.7	A1	Available for programmed (SIO) or direct I/O
	A2	30215-60002 Magnetic Tape Controller Processor
	A3	30215-60006 Magnetic Tape Controller
	A4	Available for programmed (SIO) or direct I/O
	A5	Available for programmed (SIO) or direct I/O
	A6	Available for programmed (SIO) or direct I/O
	A7	Available for programmed (SIO) or direct I/O
	A8	Available for programmed (SIO) or direct I/O
	A9	Available for programmed (SIO) or direct I/O
	A10	Available for programmed (SIO) or direct I/O

Table 1-2. PCA Slot Assignments (32421A) with HP 30418A Upgrade Kit Installed

	SLOT	PRINTED CIRCUIT ASSEMBLY
CARD CAGE NO.1	A1	Reserved for maintenance panel PCA.
	A2	30012-60001 Extended Instruction Set
	A3	30003-60021 Read Only Memory
	A4	30003-60022 Skip and Special Field
	A5	30003-60003 Arithmetic and Logic Unit
	A6	30003-60004 R Bus
	A7	30003-60025 S Bus
	A8	30003-60006 Current Instruction Register
	A9	30003-60007 Module Control Unit
	A10	30003-60028 Input Output Processor
CARD CAGE NO.2	A1	30032-60001 Terminal Data Interface
	A2	30061-60001 Terminal Control Interface
	A3	Reserved for 203 Modem capability
	A4	30009-60002 Fault Logging Interface
	A5	
	A6	30008-60003 Memory Array (128K)
	A7	30008-60003 Memory Array (128K)
	A8	30008-60003 Memory Array (128K)
	A9	30008-60003 Memory Array (128K)
	A10	30007-60005 Memory Control and Logging
CARD CAGE NO.3	A1	30007-60004 Memory Control and Logging
	A2	Slots A2 and A3 are available
	A3	to add 256K
	A4	30008-60003 Memory Array (128K)
	A5	30008-60003 Memory Array (128K)
	A6	
	A7	30030-60020 Selector Channel Port Controller
	A8	30030-60021 Selector Channel Register
	A9	30030-60003 Selector Channel Control
	A10	30030-60011 Selector Channel Sequencer
CARD CAGE NO.4	A1	30036-60002 Multiplexer Channel
	A2	Available for programmed (SIO) or direct I/O.
	A3	Available for programmed (SIO) or direct I/O.
	A4	Available for programmed (SIO) or direct I/O.
	A5	30031-60001 System Clock
	A6	Interrupt Poll Jumper (IPJ) 30000-60001
	A7	30229-60001 7905A/20A/25A Interface
	A8	13037-60028 Disc Controller
	A9	13037-60024 Error Correction
	A10	13037-60001 Microprocessor

	SLOT	PRINTED CIRCUIT ASSEMBLY
CARD CAGE NO.7	A1	Available for programmed (SIO) or direct I/O
	A2	30215-60002 Magnetic Tape Controller Processor
	A3	30215-60006 Magnetic Tape Controller
	A4	Available for programmed (SIO) or direct I/O
	A5	Available for programmed (SIO) or direct I/O
	A6	Available for programmed (SIO) or direct I/O
	A7	Available for programmed (SIO) or direct I/O
	A8	Available for programmed (SIO) or direct I/O
	A9	Available for programmed (SIO) or direct I/O
	A10	Available for programmed (SIO) or direct I/O

Table 1-3. PCA Slot Assignments (32421A), Option 200

	SLOT	PRINTED CIRCUIT ASSEMBLY
CARD CAGE NO.5	A1	30036-60002 Multiplexer Channel
	A2	30215-60002 Magnetic Tape Controller Processor
	A3	30215-60006 Magnetic Tape Controller
	A4	30031-60001 System Clock
	A5	Available for programmed (SIO) or direct I/O
	A6	Available for programmed (SIO) or direct I/O
	A7	Available for programmed (SIO) or direct I/O
	A8	Available for programmed (SIO) or direct I/O
	A9	Available for programmed (SIO) or direct I/O
	A10	Available for programmed (SIO) or direct I/O
CARD CAGE NO.6	A1	Available for programmed (SIO) or direct I/O
	A2	Available for programmed (SIO) or direct I/O
	A3	Available for programmed (SIO) or direct I/O
	A4	Available for programmed (SIO) or direct I/O
	A5	Available for programmed (SIO) or direct I/O
	A6	Available for programmed (SIO) or direct I/O
	A7	Available for programmed (SIO) or direct I/O
	A8	Available for programmed (SIO) or direct I/O
	A9	Available for programmed (SIO) or direct I/O
	A10	Available for programmed (SIO) or direct I/O
CARD CAGE NO.7	A1	Available for programmed (SIO) or direct I/O
	A2	Available for programmed (SIO) or direct I/O
	A3	Available for programmed (SIO) or direct I/O
	A4	Available for programmed (SIO) or direct I/O
	A5	Available for programmed (SIO) or direct I/O
	A6	Available for programmed (SIO) or direct I/O
	A7	Available for programmed (SIO) or direct I/O
	A8	Reserved for second disc controller
	A9	Reserved for second disc controller
	A10	Reserved for second disc controller

	SLOT	PRINTED CIRCUIT ASSEMBLY
CARD CAGE NO.1	A1	Reserved for maintenance panel PCA.
	A2	30012-60001 Extended Instruction Set
	A3	30003-60021 Read Only Memory
	A4	30003-60022 Skip and Special Field
	A5	30003-60003 Arithmetic and Logic Unit
	A6	30003-60004 R Bus
	A7	30003-60025 S Bus
	A8	30003-60006 Current Instruction Register
	A9	30003-60007 Module Control Unit
	A10	30003-60028 Input Output Processor
CARD CAGE NO.2	A1	30032-60001 Terminal Data Interface
	A2	30061-60001 Terminal Control Interface
	A3	Reserved for 203 Modem capability
	A4	30009-60002 Fault Logging Interface
	A5	
	A6	30008-60003 Memory Array (128K)
	A7	Available to add 128K.
	A8	Available to add 128K.
	A9	Available to add 128K.
	A10	30007-60005 Memory Control and Logging
CARD CAGE NO.3	A1	Available for add-on memory
	A2	Available for add-on memory
	A3	Available for add-on memory
	A4	Available for add-on memory
	A5	Available for add-on memory
	A6	
	A7	30030-60020 Selector Channel Port Controller
	A8	30030-60021 Selector Channel Register
	A9	30030-60003 Selector Channel Control
	A10	30030-60011 Selector Channel Sequencer
CARD CAGE NO.4	A1	Reserved for second Selector Channel
	A2	Reserved for second Selector Channel
	A3	Reserved for second Selector Channel
	A4	IJP 30000-60001
	A5	Reserved for second 7905A/20A/25A Interface
	A6	IJP 30000-60001
	A7	30229-60001 7905A/20A/25A Interface
	A8	13037-60028 Disc Controller
	A9	13037-60024 Error Correction
	A10	13037-60001 Microprocessor

Table 1-4. PCA Slot Assignments (32421A), Option 200, with HP 30418A Upgrade Kit Installed

	SLOT	PRINTED CIRCUIT ASSEMBLY
CARD CAGE NO.5	A1	30036-60002 Multiplexer Channel
	A2	30215-60002 Magnetic Tape Controller Processor
	A3	30215-60006 Magnetic Tape Controller
	A4	30031-60001 System Clock
	A5	Available for programmed (SIO) or direct I/O
	A6	Available for programmed (SIO) or direct I/O
	A7	Available for programmed (SIO) or direct I/O
	A8	Available for programmed (SIO) or direct I/O
	A9	Available for programmed (SIO) or direct I/O
	A10	Available for programmed (SIO) or direct I/O
CARD CAGE NO.6	A1	Available for programmed (SIO) or direct I/O
	A2	Available for programmed (SIO) or direct I/O
	A3	Available for programmed (SIO) or direct I/O
	A4	Available for programmed (SIO) or direct I/O
	A5	Available for programmed (SIO) or direct I/O
	A6	Available for programmed (SIO) or direct I/O
	A7	Available for programmed (SIO) or direct I/O
	A8	Available for programmed (SIO) or direct I/O
	A9	Available for programmed (SIO) or direct I/O
	A10	Available for programmed (SIO) or direct I/O
CARD CAGE NO.7	A1	Available for programmed (SIO) or direct I/O
	A2	Available for programmed (SIO) or direct I/O
	A3	Available for programmed (SIO) or direct I/O
	A4	Available for programmed (SIO) or direct I/O
	A5	Available for programmed (SIO) or direct I/O
	A6	Available for programmed (SIO) or direct I/O
	A7	Available for programmed (SIO) or direct I/O
	A8	Reserved for second disc controller
	A9	Reserved for second disc controller
	A10	Reserved for second disc controller

	SLOT	PRINTED CIRCUIT ASSEMBLY
CARD CAGE NO.1	A1	Reserved for maintenance panel PCA.
	A2	30012-60001 Extended Instruction Set
	A3	30003-60021 Read Only Memory
	A4	30003-60022 Skip and Special Field
	A5	30003-60003 Arithmetic and Logic Unit
	A6	30003-60004 R Bus
	A7	30003-60025 S Bus
	A8	30003-60006 Current Instruction Register
	A9	30003-60007 Module Control Unit
	A10	30003-60028 Input Output Processor
CARD CAGE NO.2	A1	30032-60001 Terminal Data Interface
	A2	30061-60001 Terminal Control Interface
	A3	Reserved for 203 Modem capability
	A4	30009-60002 Fault Logging Interface
	A5	
	A6	30008-60003 Memory Array (128K)
	A7	30008-60003 Memory Array (128K)
	A8	30008-60003 Memory Array (128K)
	A9	30008-60003 Memory Array (128K)
	A10	30007-60005 Memory Control and Logging
CARD CAGE NO.3	A1	30007-60005 Memory Control and Logging
	A2	Available to add 128K
	A3	Available to add 128K
	A4	30008-60003 Memory Array (128K)
	A5	30008-60003 Memory Array (128K)
	A6	
	A7	30030-60020 Selector Channel Port Controller
	A8	30030-60021 Selector Channel Register
	A9	30030-60003 Selector Channel Control
	A10	30030-60011 Selector Channel Sequencer
CARD CAGE NO.4	A1	Reserved for second Selector Channel
	A2	Reserved for second Selector Channel
	A3	Reserved for second Selector Channel
	A4	IJP 30000-60001
	A5	Reserved for second 7905A/20A/25A Interface
	A6	IJP 30000-60001
	A7	30229-60001 7905A/20A/25A Interface
	A8	13037-60028 Disc Controller
	A9	13037-60024 Error Correction
	A10	13037-60001 Microprocessor

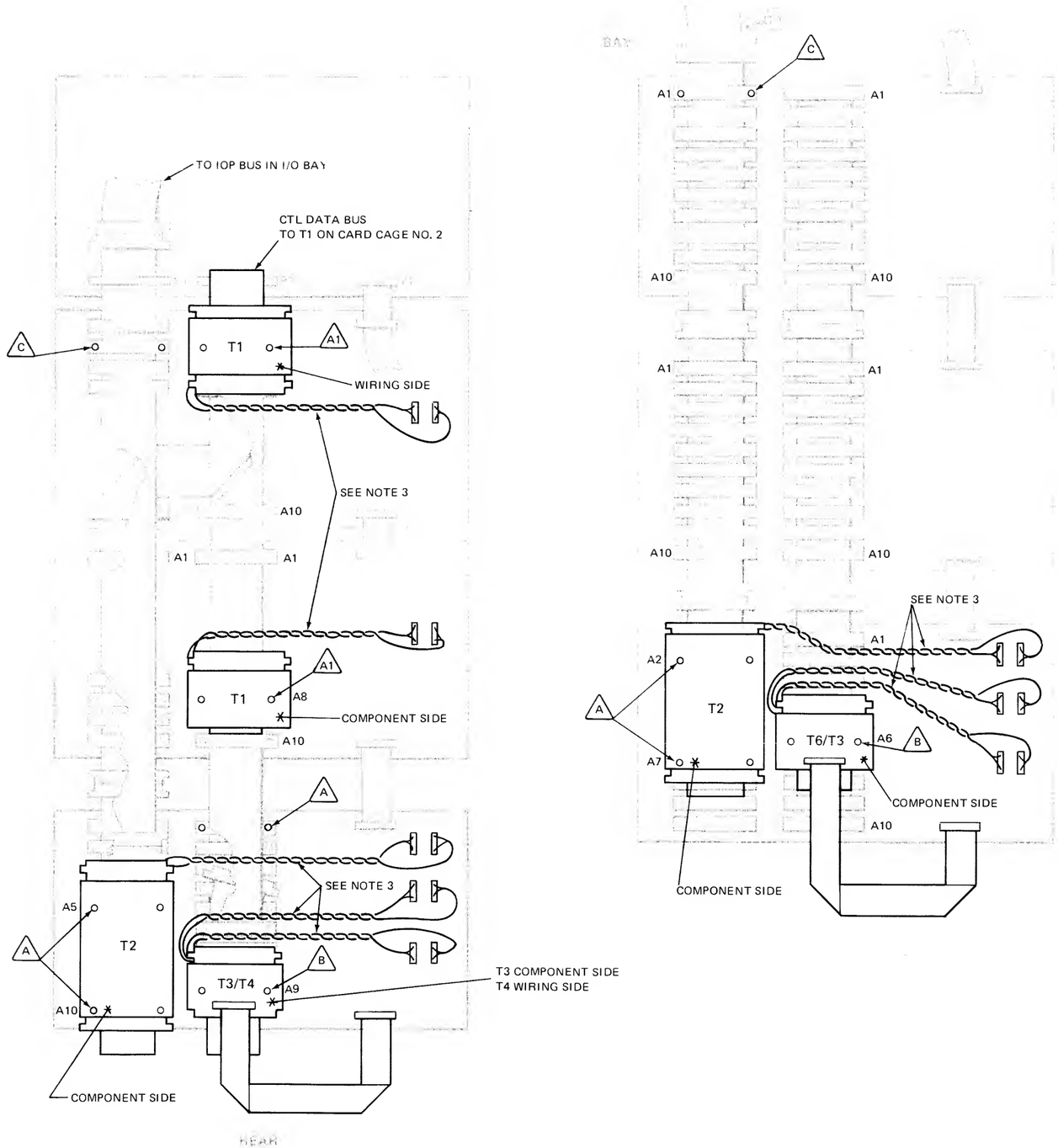

047001-05

NOTES:

1. TERMINATORS ARE IDENTIFIED AS FOLLOWS:

TERMINATOR	QUANTITY	PART NUMBER
T1	2	30003-60030
T2	2	30001-60016
T3	2	30001-60021
T4	1*	30030-60015
T6	1	30035-60003

2. PRINTED CIRCUIT EDGE CONNECTOR J1 OF A TERMINATOR PLUGS INTO A FLAT CABLE CONNECTOR TO TERMINATE THE CABLE RUN. CORRECT TERMINATOR ORIENTATION IS ASSURED IF YOU KEEP PINS 49 AND 50 OF THE EDGE CONNECTOR TO THE LEFT WHEN TERMINATING THE FLAT CABLE.

3. EACH TERMINATOR HAS A RED TWISTED PAIR CABLE WHICH CONNECTS FROM EDGE P1 OF THE TERMINATOR PCA TO PINS 2 AND 1 (+5 VOLTS) ON ANY POWER BUS CONNECTOR P1. A BLACK TWISTED PAIR CABLE CONNECTS FROM THE PCA TO PINS 16 AND 15 OF THE SAME POWER BUS CONNECTOR.

4. T1/T4 = T1 IS BENEATH; T4 IS VISIBLE.
   T6/T3 = T6 IS BENEATH; T3 IS VISIBLE.

A = DETAIL A, ITEMS 5, 6, 8

A1 = DETAIL A, ITEMS 2, 3, 5, 6, 8

B = DETAIL B

C = DETAIL C

D = FLAT CABLE CONNECTORS JOINED WITH EXTENDER BOARDS

TERMINATOR MOUNTING HARDWARE

1. 1 INCH ROUND SPACER
2. .125 NYLON SPACER
3. SPLIT LOCK WASHER
4. SCREW
5. SCREW WITH LOCK WASHER
6. FLAT WASHER
7. EXTENDER BOARD
8. HEX STANDOFF

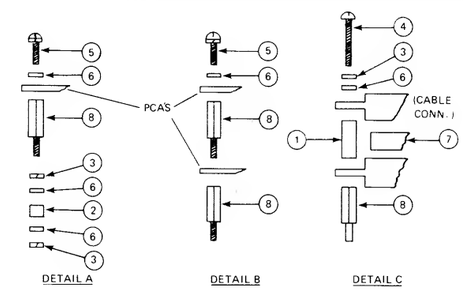

Figure 1-3. Flat Cable Terminators (32421A)

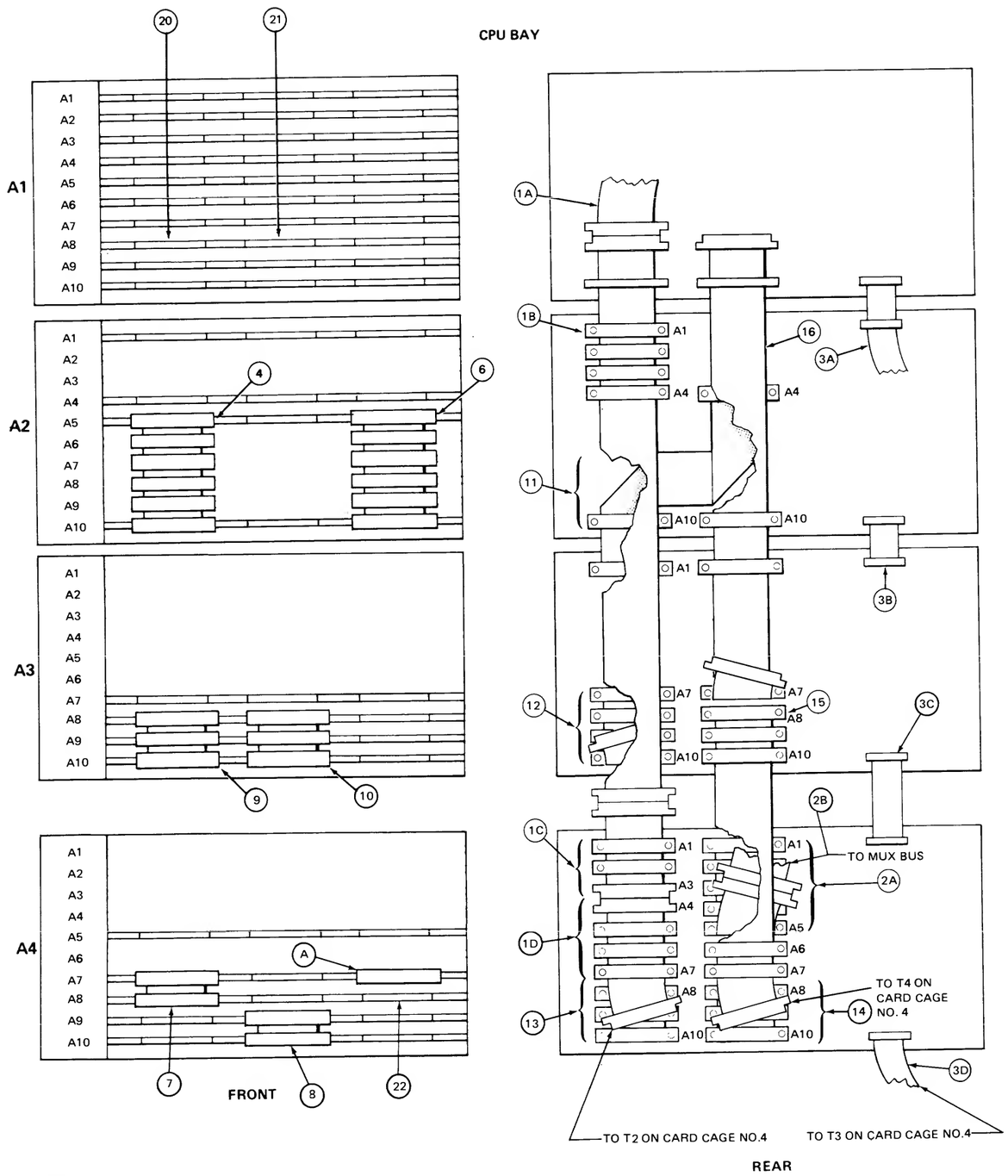

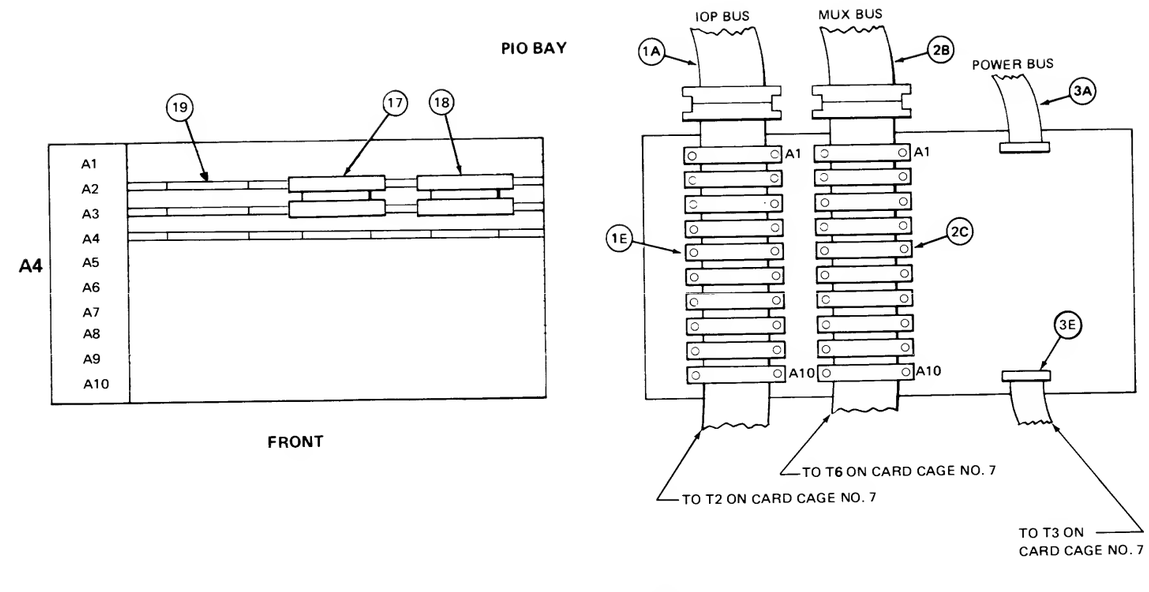

CABLE	PART NUMBER
1A	30000-93068
1B	30000-93132
1C	30000-93131
1D	30000-93117
1E	30000-93041
2A	30000-93130
2B	30000-93068
2C	30000-93041
3A	30000-93007
3B	30000-93004
3C	30000-93005
3D	30001-60034
3E	30001-60034
4	30000-93128
6	30000-93128
7	30000-93052
8	30000-93052
9	30000-93053
10	30000-93053
11	30000-93120
12	30000-93034
13	30000-93043
14	30000-93043
15	30000-93112
16	30000-93124
17	30000-93052
18	30000-93052
19	
20	
21	
22	

TERMINATORS

T5 = 30229-60003

147001-06

Figure 1-4. System Flat Cables (32421A)

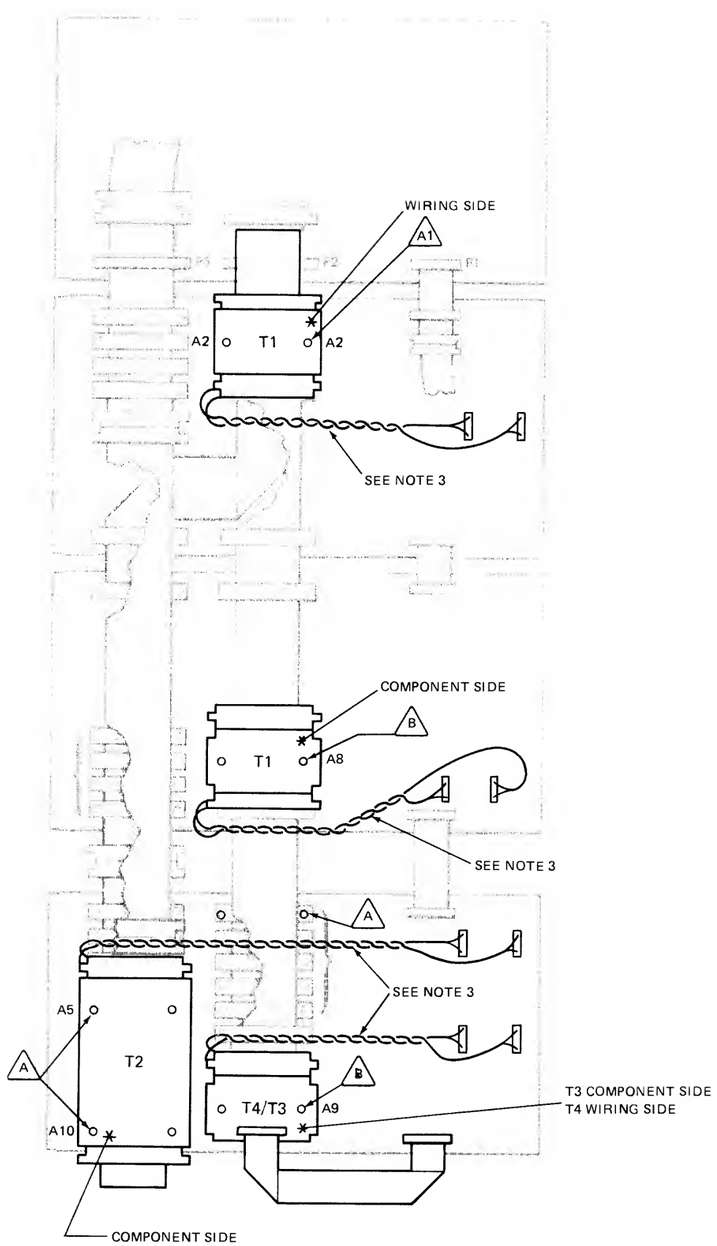

047001-07

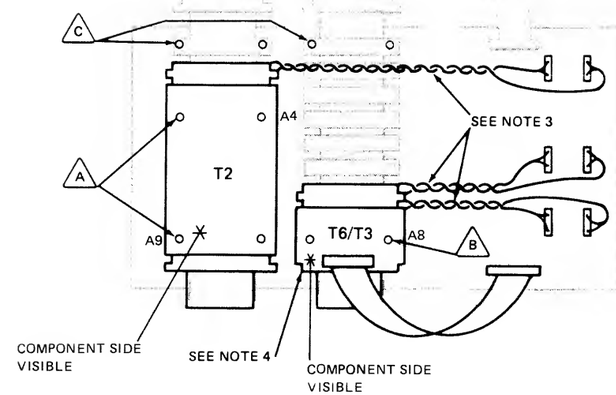

A = DETAIL A, ITEMS 5, 6, 8

A1 = DETAIL A, ITEMS 2, 3, 5, 6, 8

B = DETAIL B

C = DETAIL C

D = FLAT CABLE CONNECTORS JOINED WITH EXTENDER BOARDS

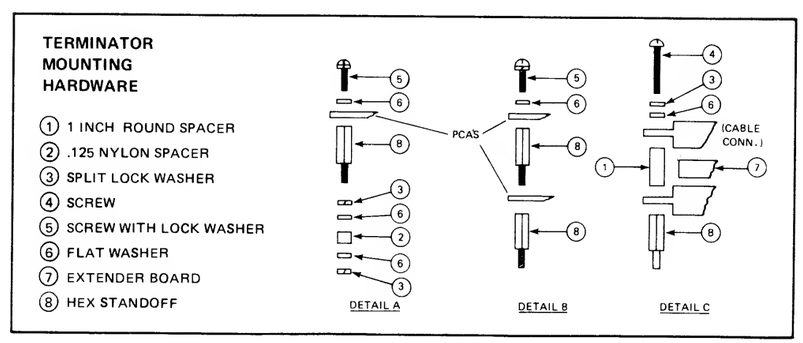

NOTES:

1. TERMINATORS ARE IDENTIFIED AS FOLLOWS:

TERMINATOR	QUANTITY	PART NUMBER
T1	2	30003-60030
T2	2	30001-60016
T3	2	30001-60021
T4	1*	30030-60015
T6	1	30035-60003

2. PRINTED CIRCUIT EDGE CONNECTOR J1 OF A TERMINATOR PLUGS INTO A FLAT CABLE CONNECTOR TO TERMINATE THE CABLE RUN. CORRECT TERMINATOR ORIENTATION IS ASSURED IF YOU KEEP PINS 49 AND 50 OF THE EDGE CONNECTOR TO THE LEFT WHEN TERMINATING THE FLAT CABLE.

3. EACH TERMINATOR (EXCEPT T5) HAS A RED TWISTED PAIR CABLE WHICH CONNECTS FROM EDGE P1 OF THE TERMINATOR PCA TO PINS 2 AND 1 (+5 VOLTS) ON ANY POWER BUS CONNECTOR P1. A BLACK TWISTED PAIR CABLE CONNECTS FROM THE PCA TO PINS 16 AND 15 OF THE SAME POWER BUS CONNECTOR.

4. T3/T4 = T1 IS BENEATH; T4 IS VISIBLE.
   T6/T3 = T6 IS BENEATH; T3 IS VISIBLE.

Figure 1-5. Flat Cable Terminators (32421A), with Option 200

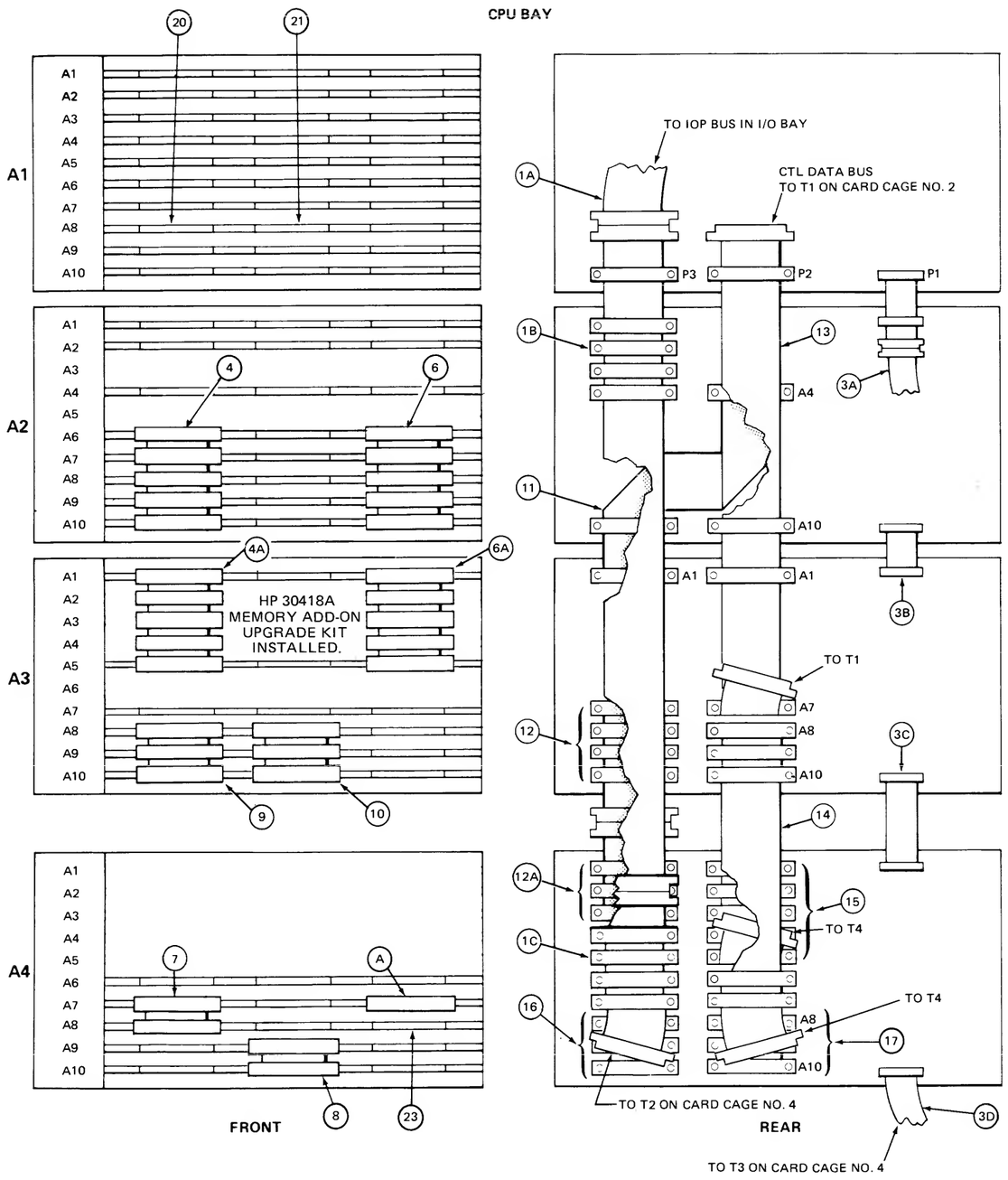

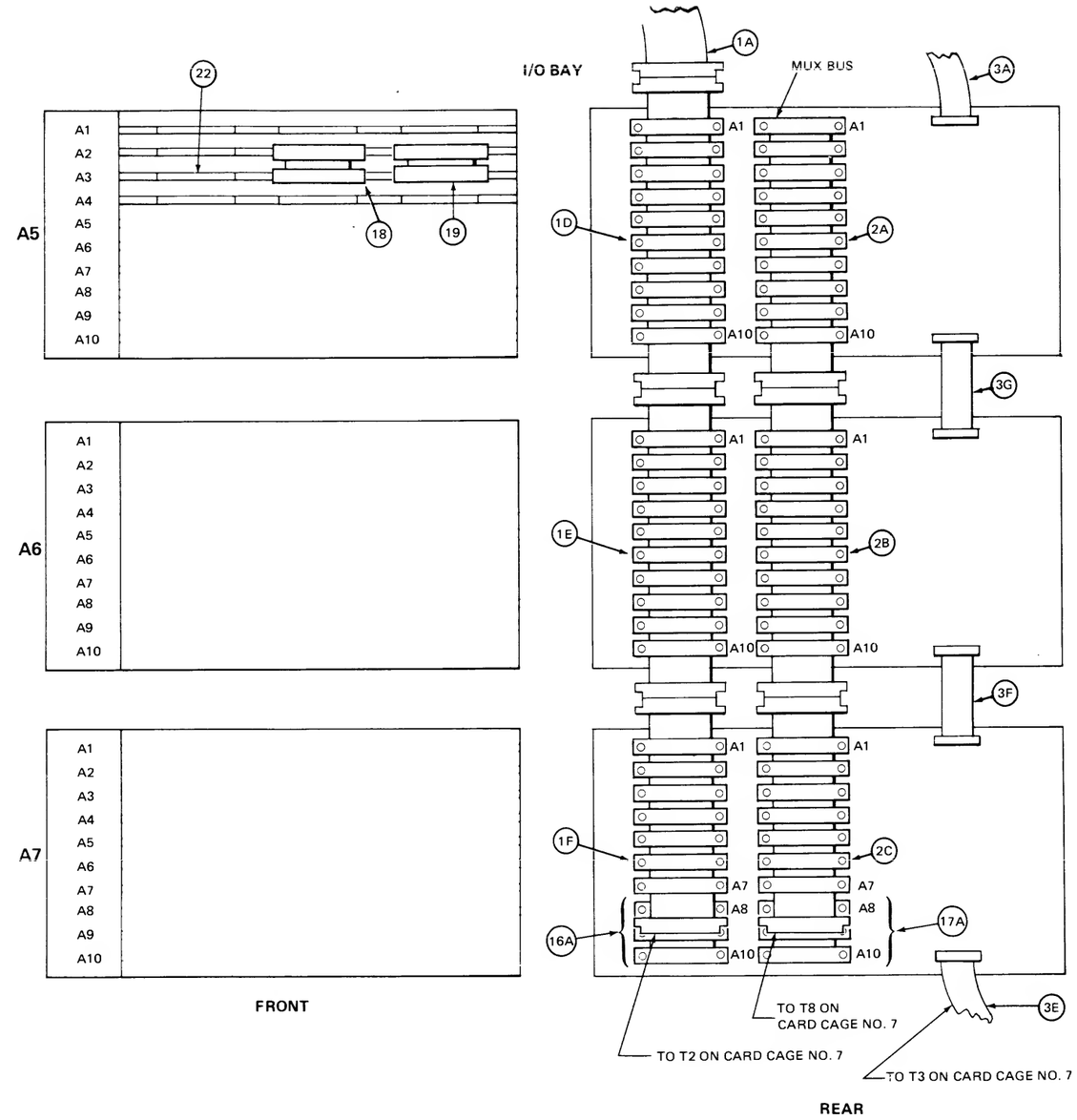

CABLE	PART NUMBER	CABLE	PART NUMBER	CABLE	PART NUMBER
1A	30000-93068	3F	30000-93005	12A	30000-93131
1B	30000-93132	3G	30000-93004	13	30000-93124
1C	30000-93117	4	30000-93128	14	30000-93112
1D	30000-93041	4A	30000-93128	15	30000-93130
1E	30000-93041	6	30000-93128	16	30000-93043
1F	30000-93106	6A	30000-93128	16A	30000-93043
2A	30000-93040	7	30000-93052	17	30000-93043
2B	30000-93041	8	30000-93052	17A	30000-93043
2C	30000-93106	9	30000-93053	18	30000-93052
3A	30000-93007	10	30000-93053	19	30000-93052
3B	30000-93004	11	30000-93120	20	
3C	30000-93005	12	30000-93034	21	
3D	30001-60034			22	
3E	30001-60034			23	

TERMINATORS
A = 30229-60003

147001-08

Figure 1-6. System Flat Cables (32421A), with Option 200

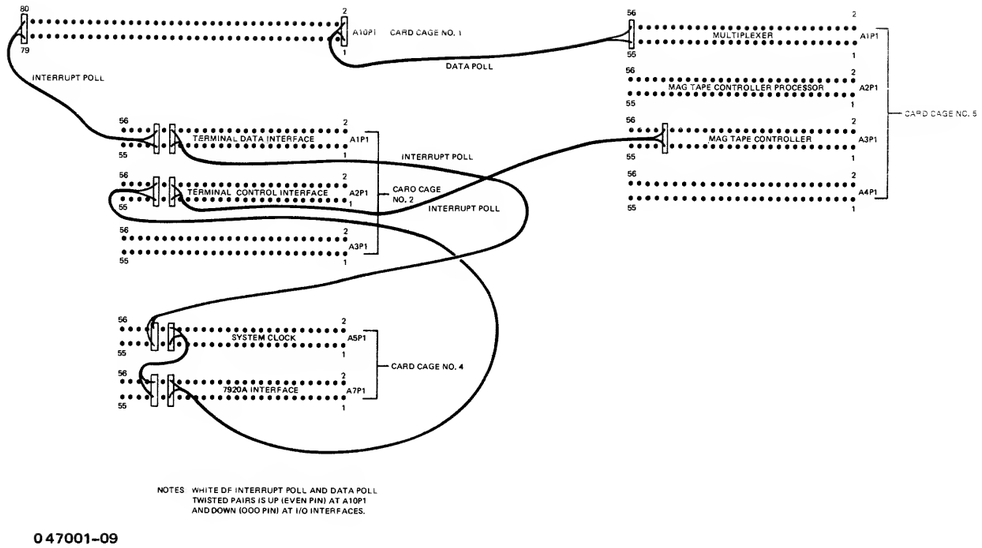

Figure 1-7. Typical Interrupt Poll Cabling (32421A)

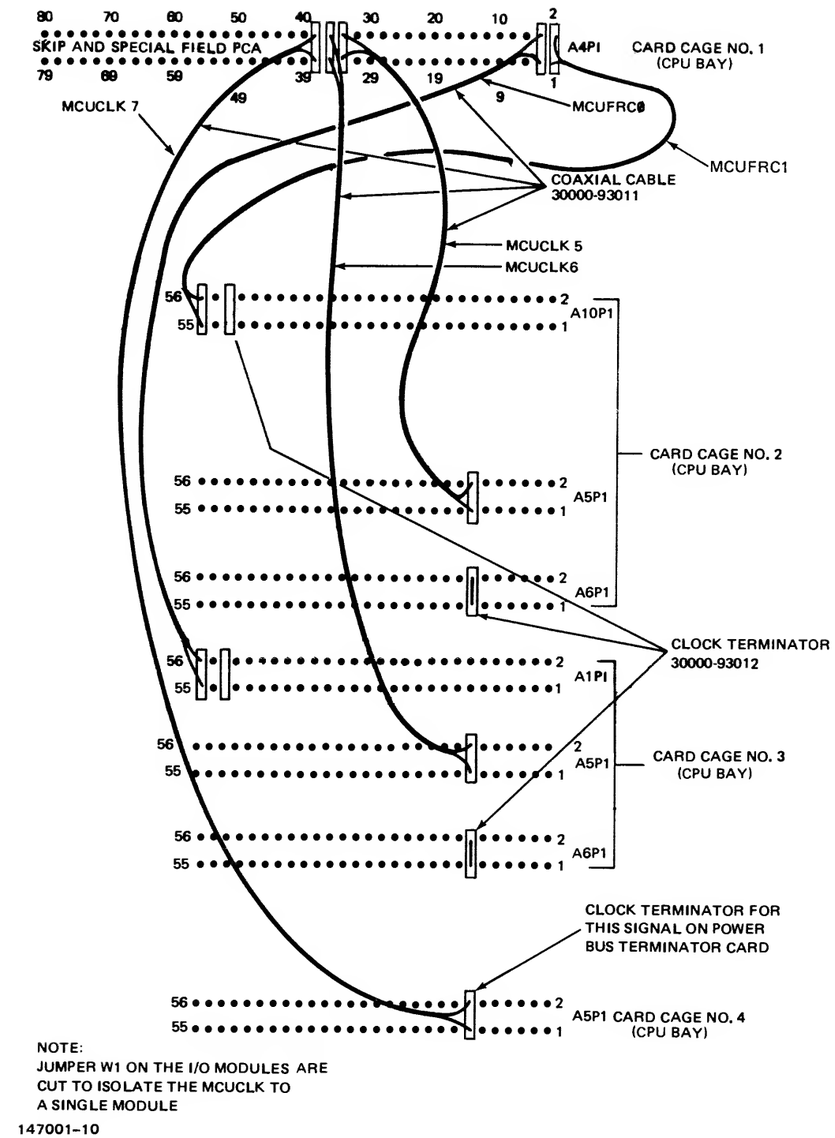

Figure 1-8. CPU Bay Clock Jumpers and Terminators (32421A)

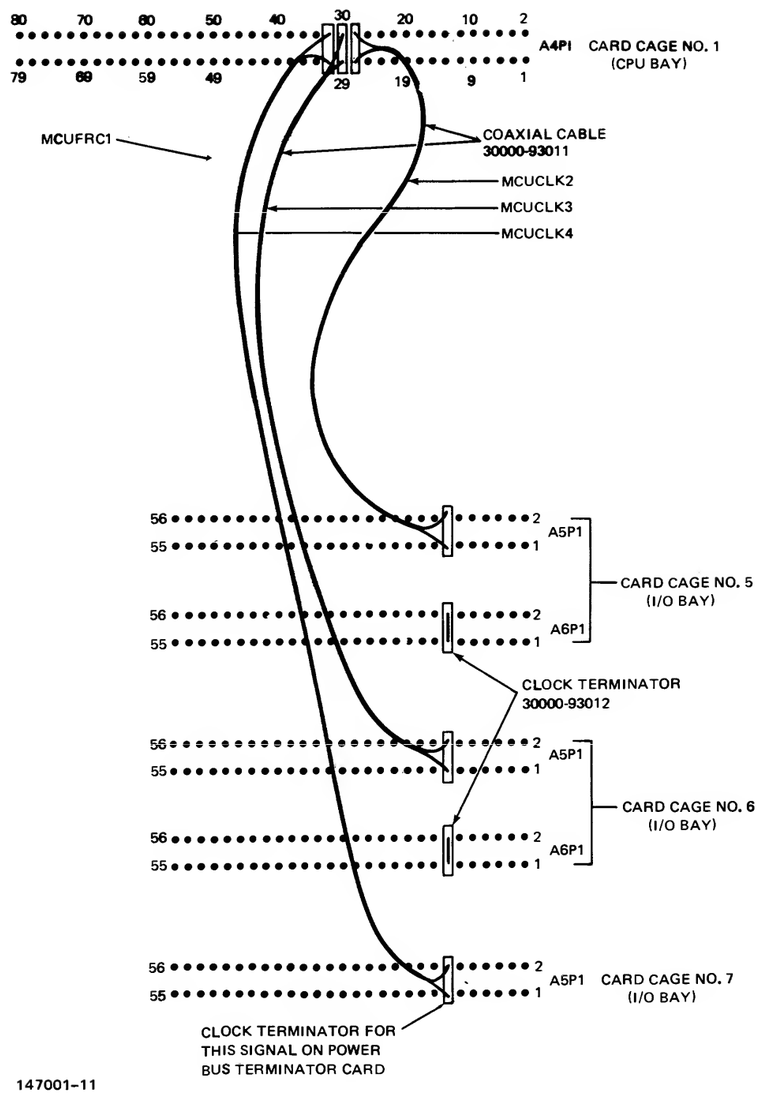

Figure 1-9. I/O Bay Clock Jumpers and Terminators (32421A)

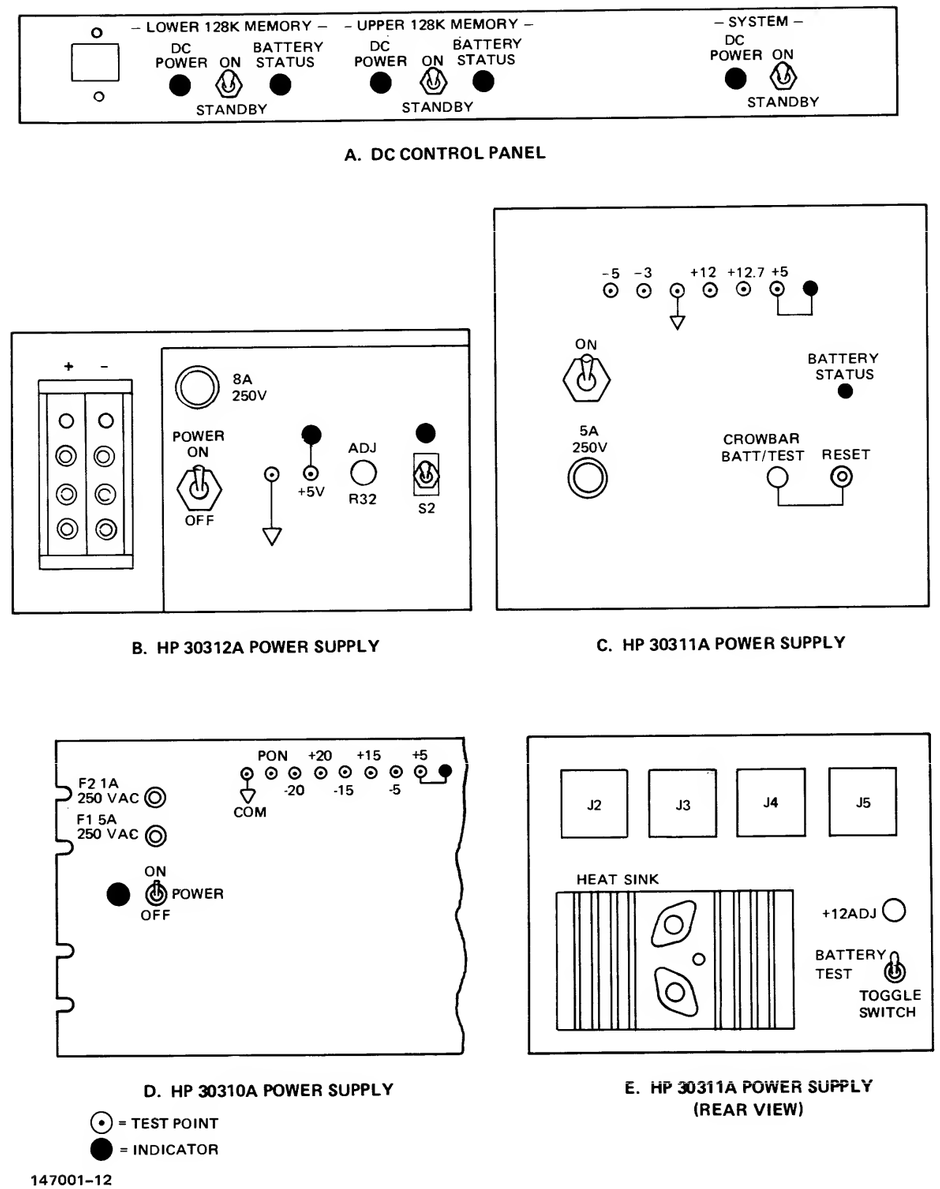

Figure 1-10. Power Controls and Indicators (32421A)

Table 1-5. Power Control and Indicator Functions (32421A)

DC Control Panel	Function
SYSTEM ON/STANDBY toggle switch.	In the ON position, enables DC voltage outputs of the HP 30310A and 30312A Power Supplies. In STANDBY, all DC power supply outputs are disabled. Batteries are then sustaining memory.
SYSTEM DC POWER indicator	Implies that system DC power is on by using +5 volts from the HP 30310A Power Supply to light its LED.
UPPER 128K MEMORY ON/STANDBY 2-pole toggle switch	In the ON position, one pole generates a DC Enable signal to its HP 30311A Power Supply. If the power supply is turned on, and if the SYSTEM ON/STANDBY and LOWER 128K MEMORY ON/STANDBY switches are ON, the power supply will power memory and maintain the charge on its battery. If either or both of these other switches are set to STANDBY, the HP 30311A powers memory by its battery backup power to the memory "refresh" circuits.. The second pole maintains continuity of the system DC Enable line which enables the HP 30310A and HP 30312A Power Supply outputs. In the STANDBY position, the system DC Enable line is opened and all DC power supply outputs, except battery backuppower to the lower 128K of memory, are disabled.
UPPER 128K MEMORY DC POWER indicator	Indicates that upper memory power is on by using +5 volts from HP 30311A Power Supply No. 2 to light this LED.
UPPER 128K MEMORY BATTERY STATUS indicator	Indicates battery status of HP 30311A Power Supply No. 2 by being on, flashing, or off.
LOWER 128K MEMORY ON/STANDBY toggle switch	In the ON position, one pole generates a DC Enable signal to its HP 30311A Power Supply. If the power supply is turned on, and if the SYSTEM ON/STANDBY and UPPER 128K MEMORY ON/STANDBY switches on ON, the power supply will power memory and maintain the charge on its battery. If either or both of these other switches are set to STANDBY, the HP 30311A powers memory by its battery backup power to the memory "refresh" circuits. The second pole maintains continuity of the system DC Enable line which enables the HP 30310A and HP 30312A Power Supply outputs. In the STANDBY position, the system DC Enable line is opened and all DC power supply outputs, except battery backuppower to the upper 128K of memory are disabled.
LOWER 128K MEMORY DC POWER indicator	Indicates that lower memory power is on by using +5 volts from HP 30311A Power Supply No. 1 to light this LED.
LOWER 128K MEMORY BATTERY STATUS indicator	Indicates battery status of HP 30311A Power Supply No. 1 by being on, flashing or off.
HP 30310A Power Supply	**Function**
POWER ON/OFF toggle switch and indicator	Indicator lights when toggle switch is ON connecting AC power to power supply circuits. OFF position disables the HP HP 30310A.
HP 30311A Power Supply	**Function**
Power ON/OFF toggle switch	In ON position, connects "+20 volts" terminal from the HP 30310A Power Supply to the HP 30311A circuits to maintain the charge on the battery and to develop the required memory operating voltages. Off (down) position disables the HP 30311A and disconnects the battery to prevent discharging.
BATTERY TEST momentary toggle switch	Places power supply in a battery discharge mode for test purposes (simulates a power failure). Lights the battery test indicator.
RESET pushbutton	Resets the battery discharge mode returning the power supply to normal operation. Turns off the battery test indicator.
+5 indicator	When lighted, indicates that +5 volts is being produced by the HP 30311A Power Supply.

Table 1-5. Power Controls and Indicator Functions (32421A) (Cont.)

CROWBAR/BATT TEST indicator	Used in conjunction with the BATTERY STATUS indicator to determine if the crowbar circuit has fired and shut down the power supply.
BATTERY STATUS indicator	Indicates battery condition by: a. Being on continuously for fully-charged condition. A bad (open) battery will also produce this condition. b. Flashing at 2 Hz when discharging c. Flashing at 0.5 Hz when charging d. Being off if battery is low or not installed.
HP 30312A Power Supply	**Function**
POWER ON/OFF toggle switch	The ON position connects AC power to the power supply circuits. The OFF position removes AC power.
ADJ R32 potentiometer, S2 momentary toggle switch, and LED	The potentiometer is adjusted while the toggle switch is pressed until the LED in the upper right of the front panel lights and just goes out. When the toggle switch is released, the threshold level is incremented by 10 amperes.

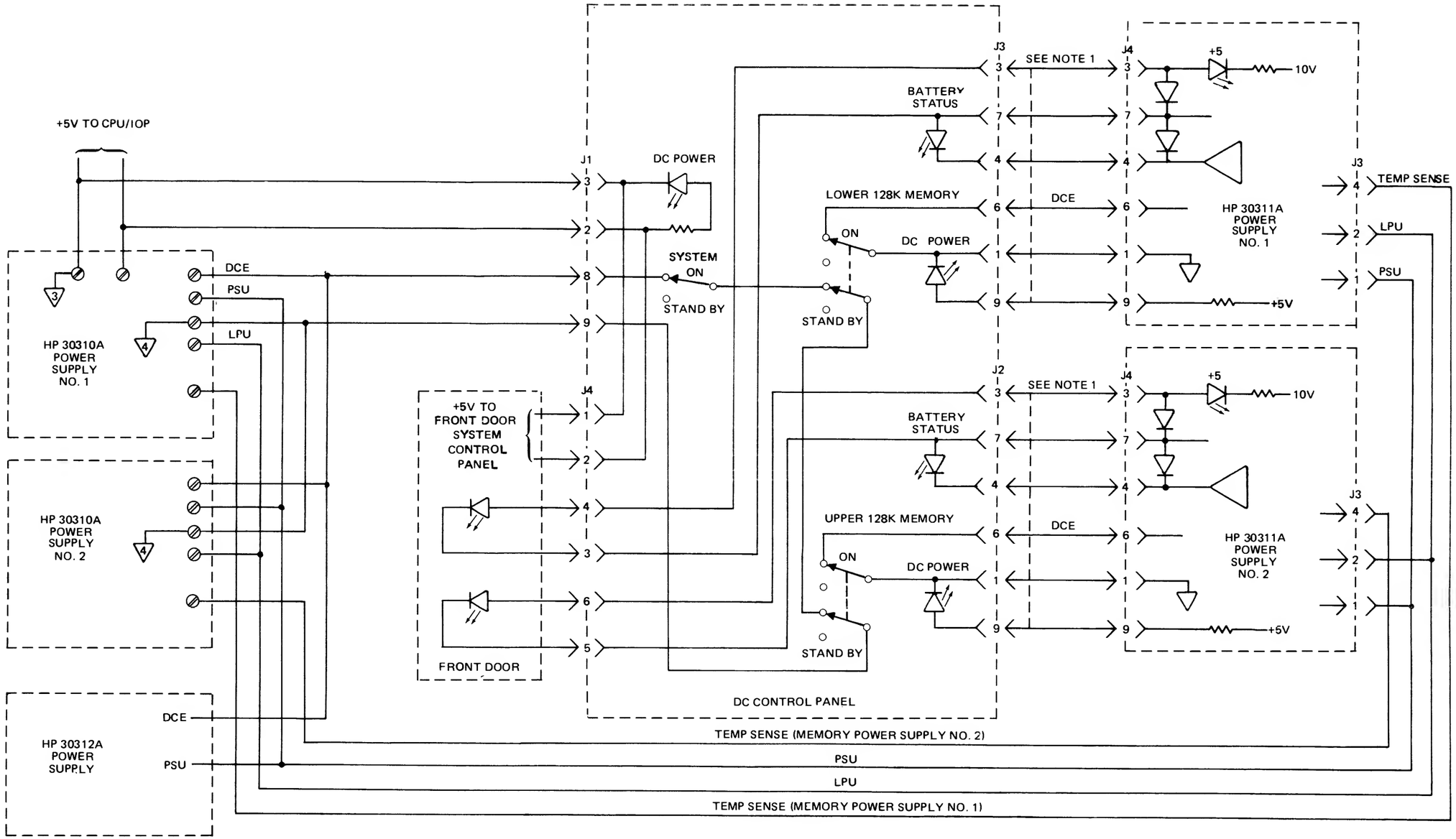

NOTES:
1. ONE 9-CONDUCTOR 30311-60007 CABLE PER 30311A SUPPLY. PINS 2-2, 5-5, AND 8-8 ARE SPARES.
2. ANY ADDITIONAL HP 30311A POWER SUPPLIES INCLUDED IN THE SYSTEM HAVE CONTROL LINES (EXCEPT TEMP SENSE) PARALLELED.

147001-13

Figure 1-11. DC Power Control Circuits (32421A)

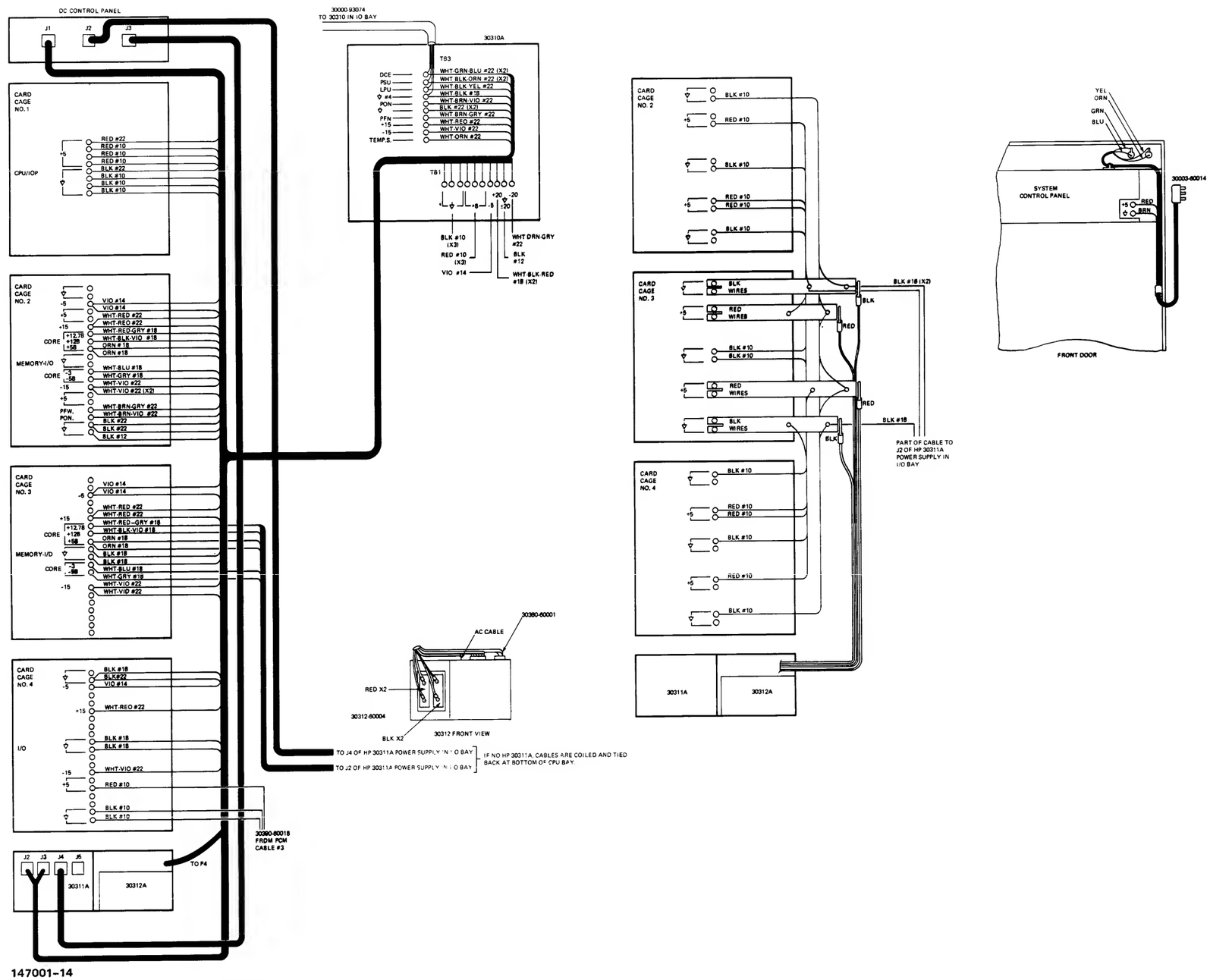

Figure 1-12. CPU Bay DC Wiring (32421A)

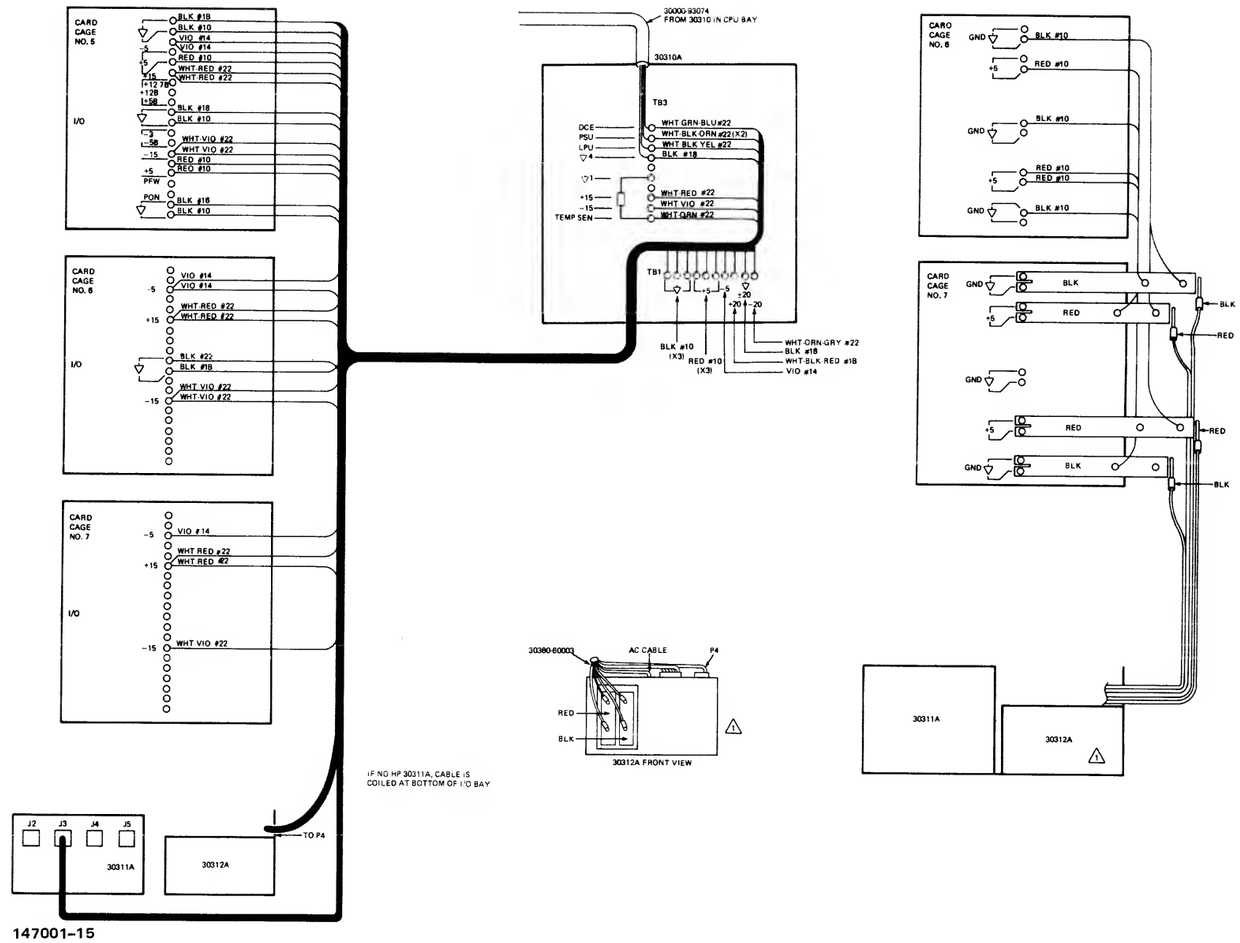

Figure 1-13. I/O Bay DC Wiring (32421A)

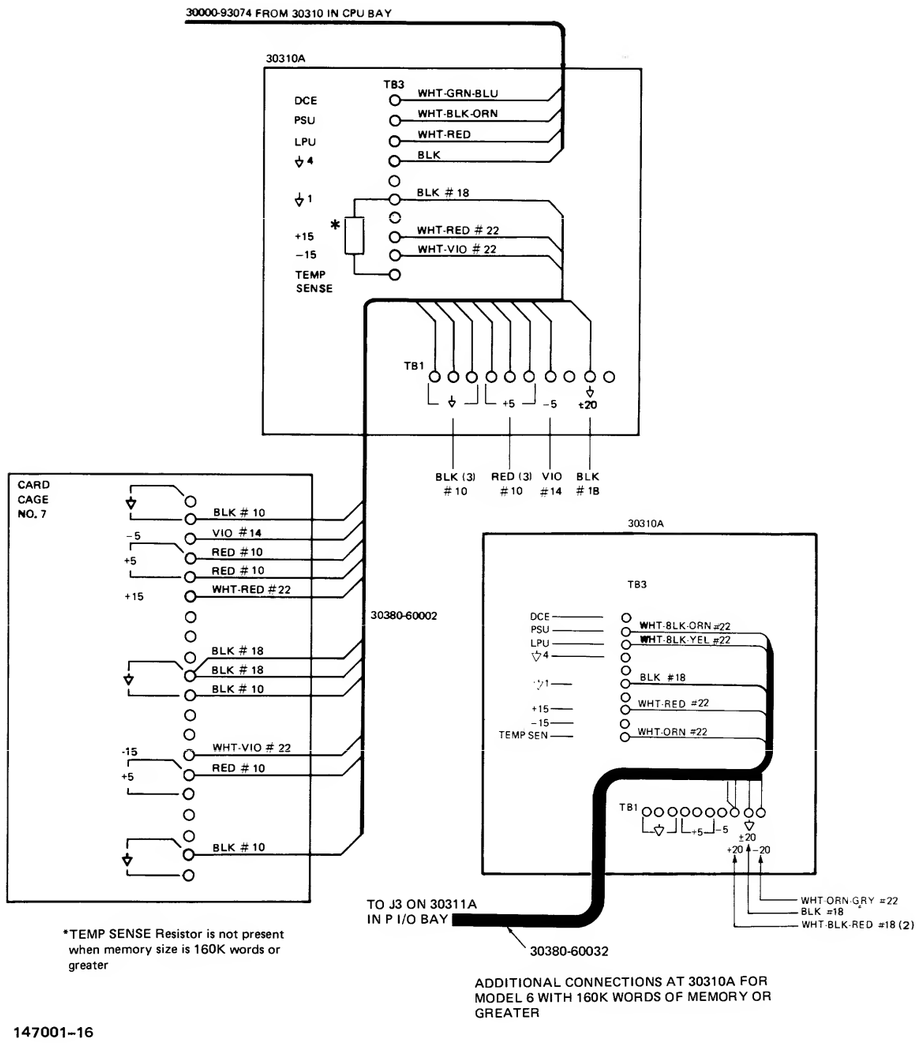

Figure 1-14. Peripheral and I/O Bay DC Wiring (32421A)

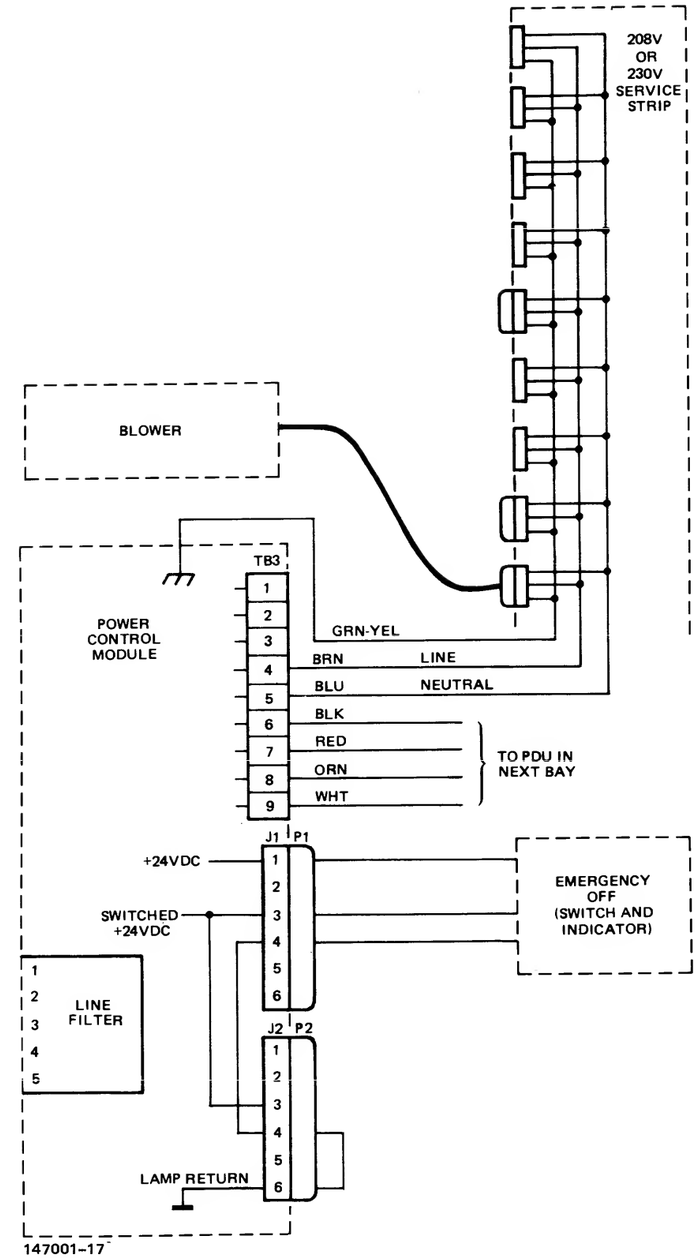

Figure 1-15. AC Distribution, CPU Bay (32421A)

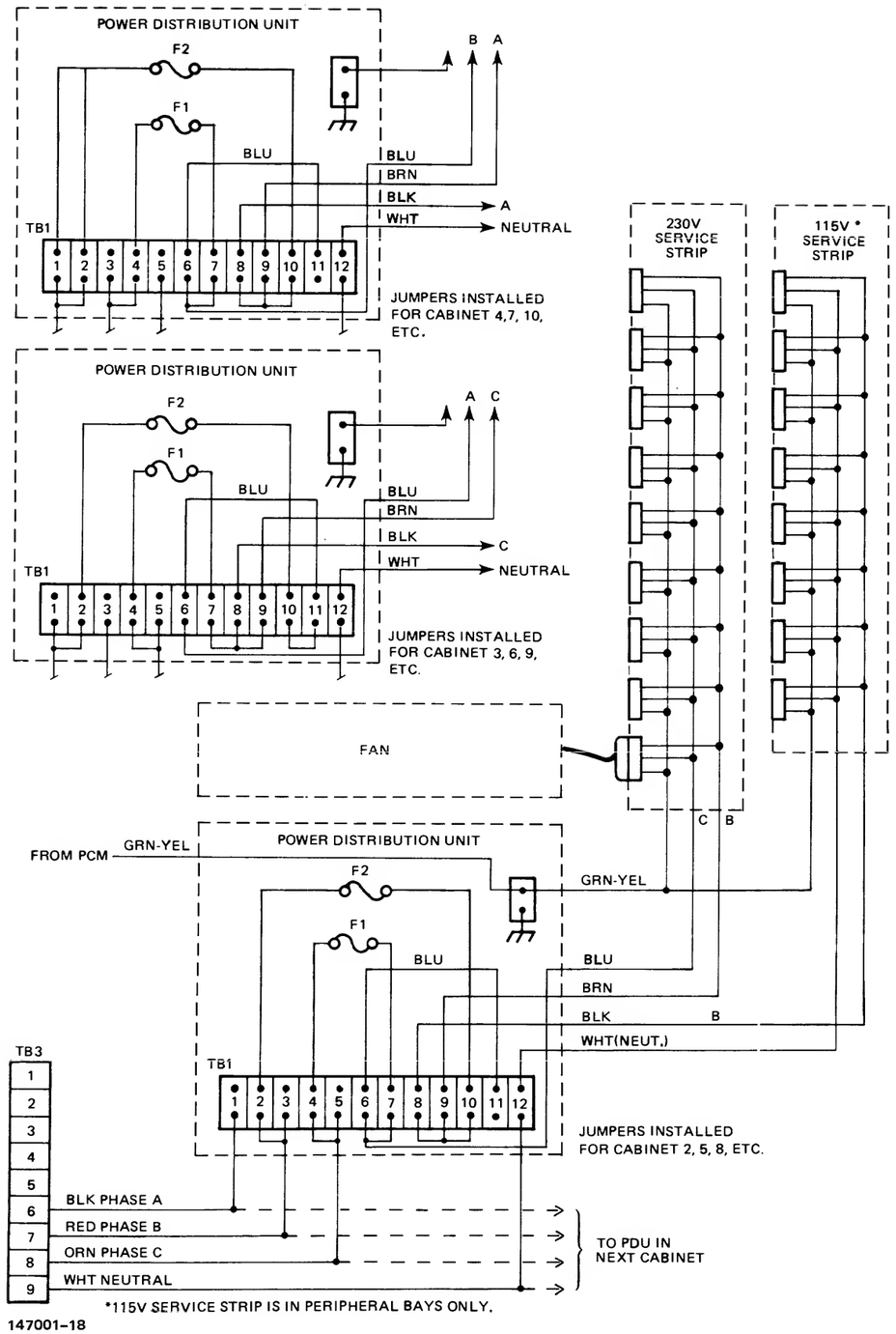

Figure 1-16. AC Distribution, Auxiliary Cabinets (120V/280V, 3Ph, 60 Hz) (32421A)

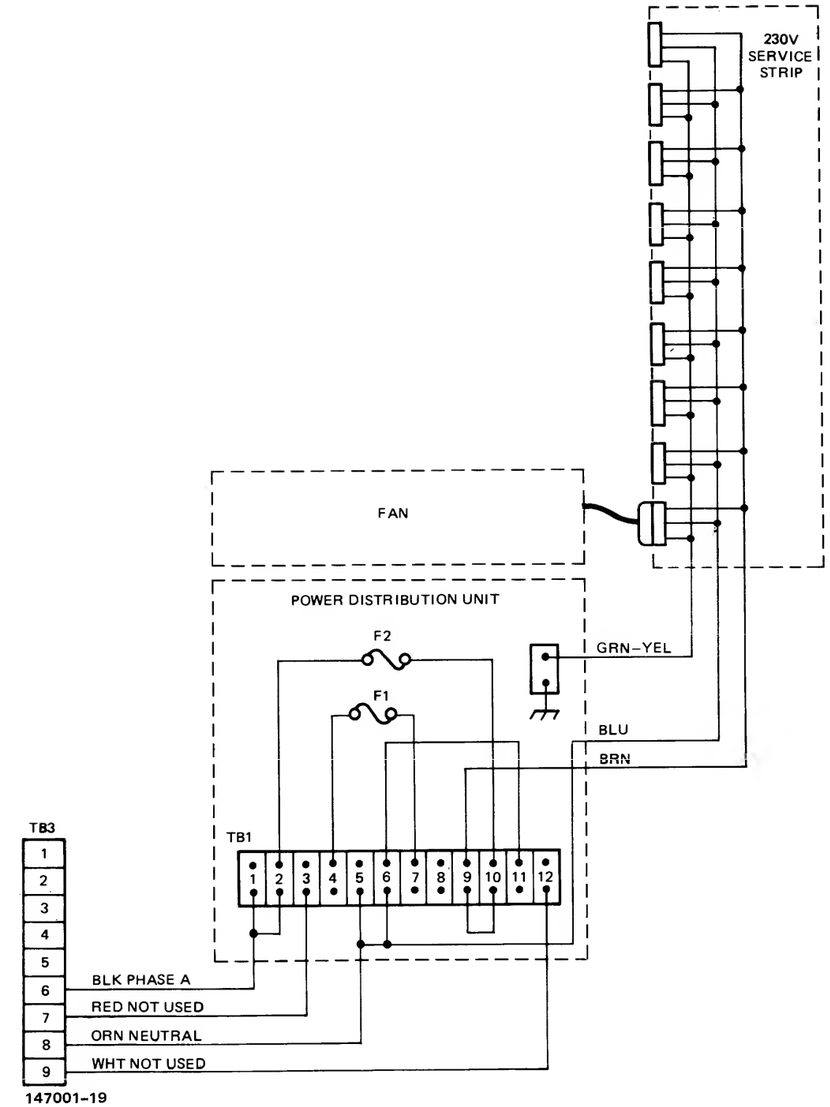

Figure 1-17. AC Distribution, Auxiliary Cabinets (230V, 1Ph, 50 Hz) (32421A)

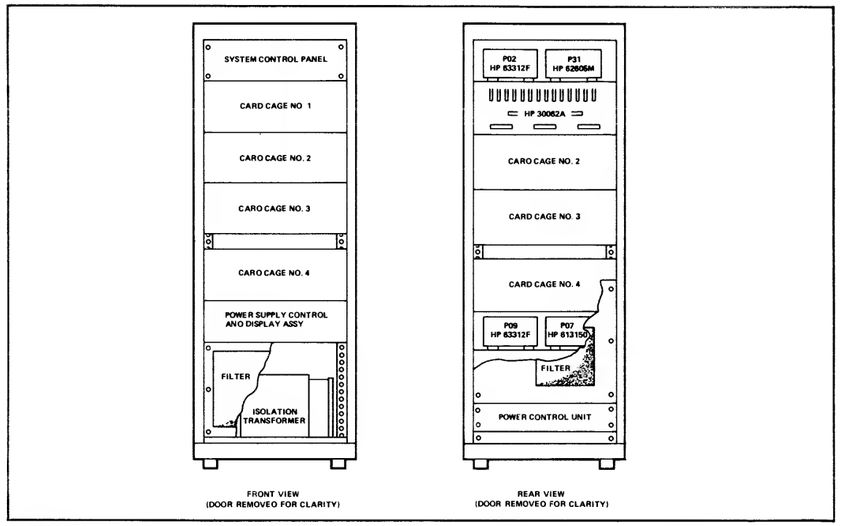

147001-20

Figure 1-18. HP 3000 Series III Computer System (32435A)

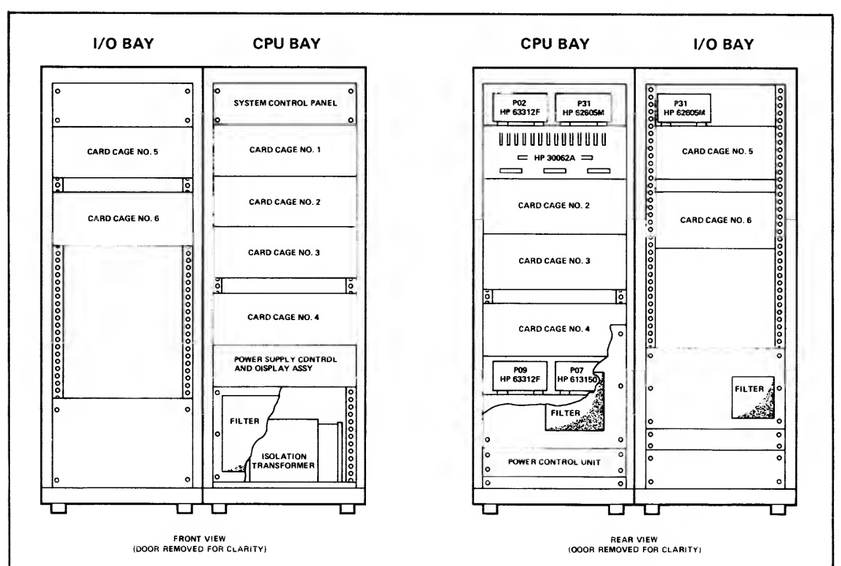

147001-21

Figure 1-19. HP 3000 Series III Computer System (32435A) with Option 200

Table 1-6. HP 3000 Series III (32435A) PCA Slot Assignments

I/O BAY (OPTION 200)

	Slot	PRINTED CIRCUIT ASSEMBLY
CARD CAGE NO. 5	A1	Available for programmed (SIO) or direct I/O
	A2	Available for programmed (SIO) or direct I/O
	A3	Available for programmed (SIO) or direct I/O
	A4	Available for programmed (SIO) or direct I/O
	A5	Available for programmed (SIO) or direct I/O
	A6	Available for programmed (SIO) or direct I/O
	A7	Available for programmed (SIO) or direct I/O
	A8	Available for programmed (SIO) or direct I/O
	A9	Available for programmed (SIO) or direct I/O
	A10	Available for programmed (SIO) or direct I/O
CARD CAGE NO. 5	A1	Available for programmed (SIO) or direct I/O
	A2	Available for programmed (SIO) or direct I/O
	A3	Available for programmed (SIO) or direct I/O
	A4	Available for programmed (SIO) or direct I/O
	A5	Available for programmed (SIO) or direct I/O
	A6	Available for programmed (SIO) or direct I/O
	A7	Available for programmed (SIO) or direct I/O
	A8	Available for programmed (SIO) or direct I/O
	A9	Available for programmed (SIO) or direct I/O
	A10	Available for programmed (SIO) or direct I/O

CPU BAY

	Slot	PRINTED CIRCUIT ASSEMBLY
CARD CAGE NO. 1	A1	Reserved for maintenance panel PCA.
	A2	30012-60001 Extended Instruction Set
	A3	30003-60021 Read Only Memory
	A4	30003-60022 Skip and Special Field
	A5	30003-60003 Arithmetic and Logic Unit
	A6	30003-60004 R Bus
	A7	30003-60025 S Bus
	A8	30003-60006 Current Instruction Register
	A9	30003-60007 Module Control Unit
	A10	30003-60028 Input Output Processor
CARD CAGE NO. 2	A1	30008-60003 Memory Array (128K)
	A2	Available to add 128K
	A3	Available to add 128K
	A4	Available to add 128K
	A5	30007-60005 Memory Control and Logic #1
	A6	Available to add Memory Control and Logic #2
	A7	Available to add 128K
	A8	Available to add 128K
	A9	Available to add 128K
	A10	Available to add 128K
CARD CAGE NO. 3	A1	30135-60063 System Clock/FLI
	A2	30032-60001 Terminal Data Interface
	A3	30061-60001 Terminal Control Interface
	A4	30030-60020 Selector Channel Port Controller
	A5	30030-60021 Selector Channel Register
	A6	30030-60003 Selector Channel Control
	A7	30030-60011 Selector Channel Sequencer
	A8	Available for programmed (SIO) or direct I/O
	A9	Available for programmed (SIO) or direct I/O
	A10	Available for programmed (SIO) or direct I/O
CARD CAGE NO. 4	A1	Available for programmed (SIO) or direct I/O
	A2	Available for programmed (SIO) or direct I/O
	A3	Available for programmed (SIO) or direct I/O
	A4	Available for programmed (SIO) or direct I/O
	A5	Available for programmed (SIO) or direct I/O
	A6	Available for programmed (SIO) or direct I/O
	A7	30215-60002 Magnetic Tape Controller Processor
	A8	30215-60006 Magnetic Tape Controller
	A9	30036-60002 Multiplexer Channel
	A10	30229-60001 Disc Control Interface

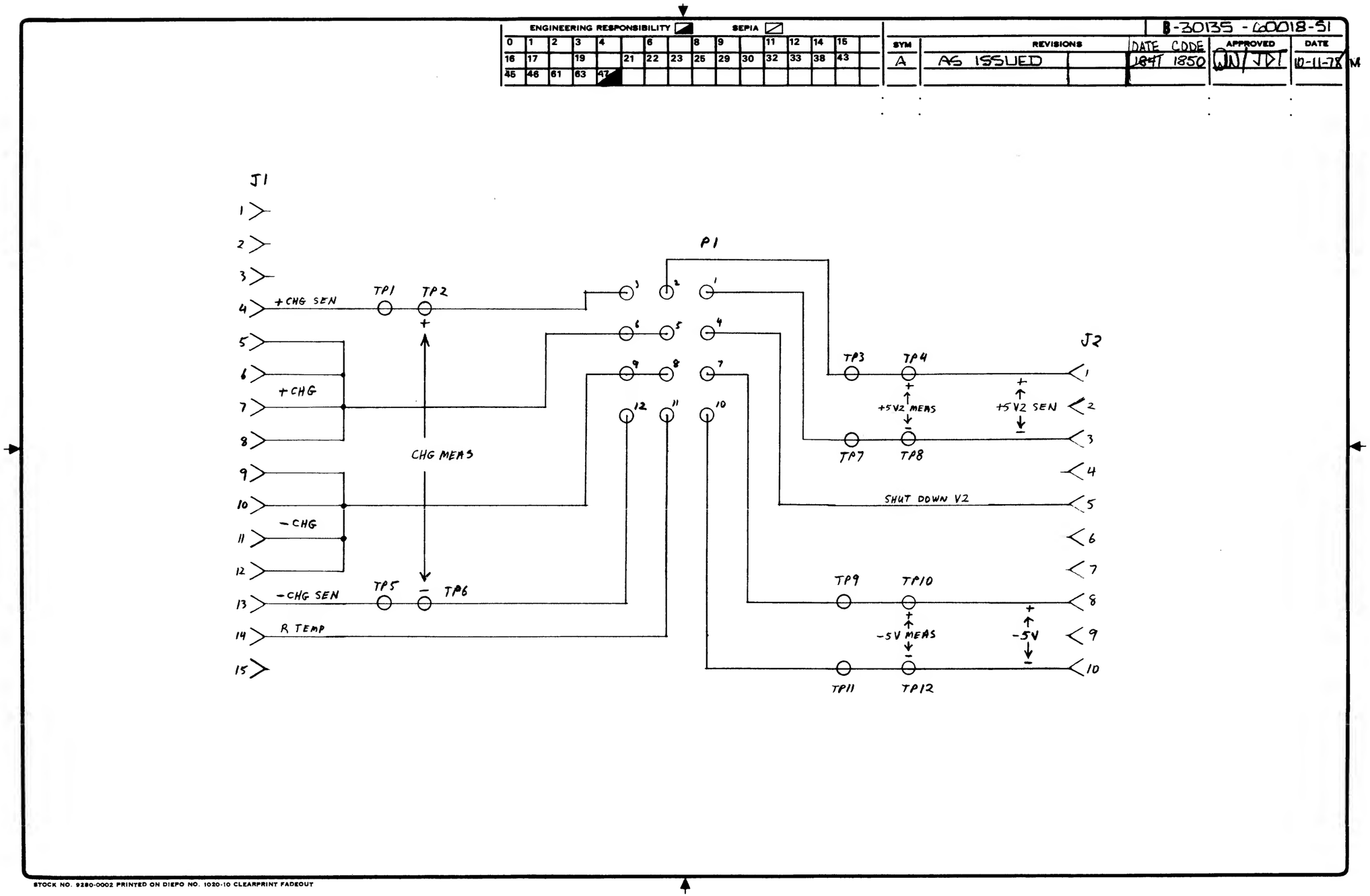

Figure 1-20. P09 Power Distribution PCA (32434A) Sheet 1 of 2

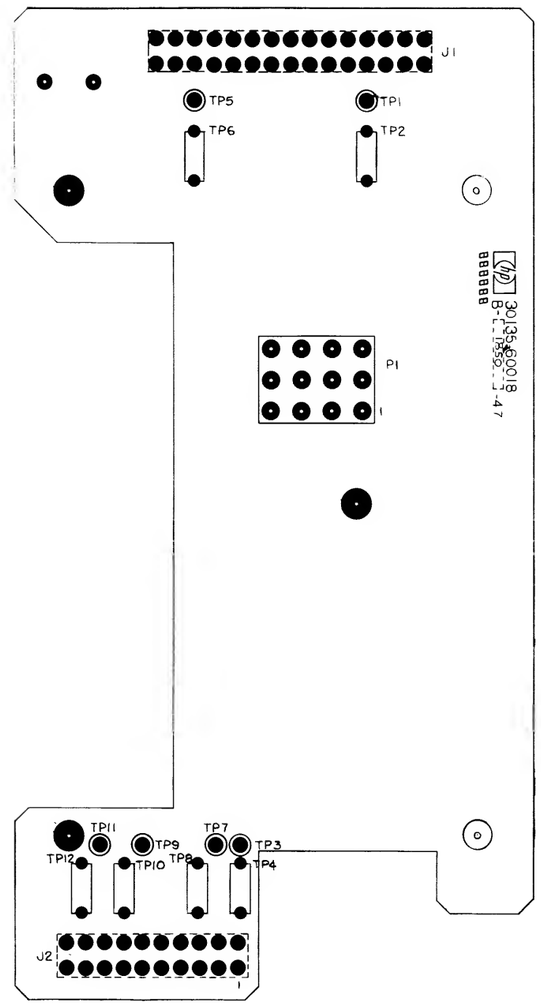

Figure 1-20. P09 Power Distribution PCA (32434A) Sheet 2 of 2

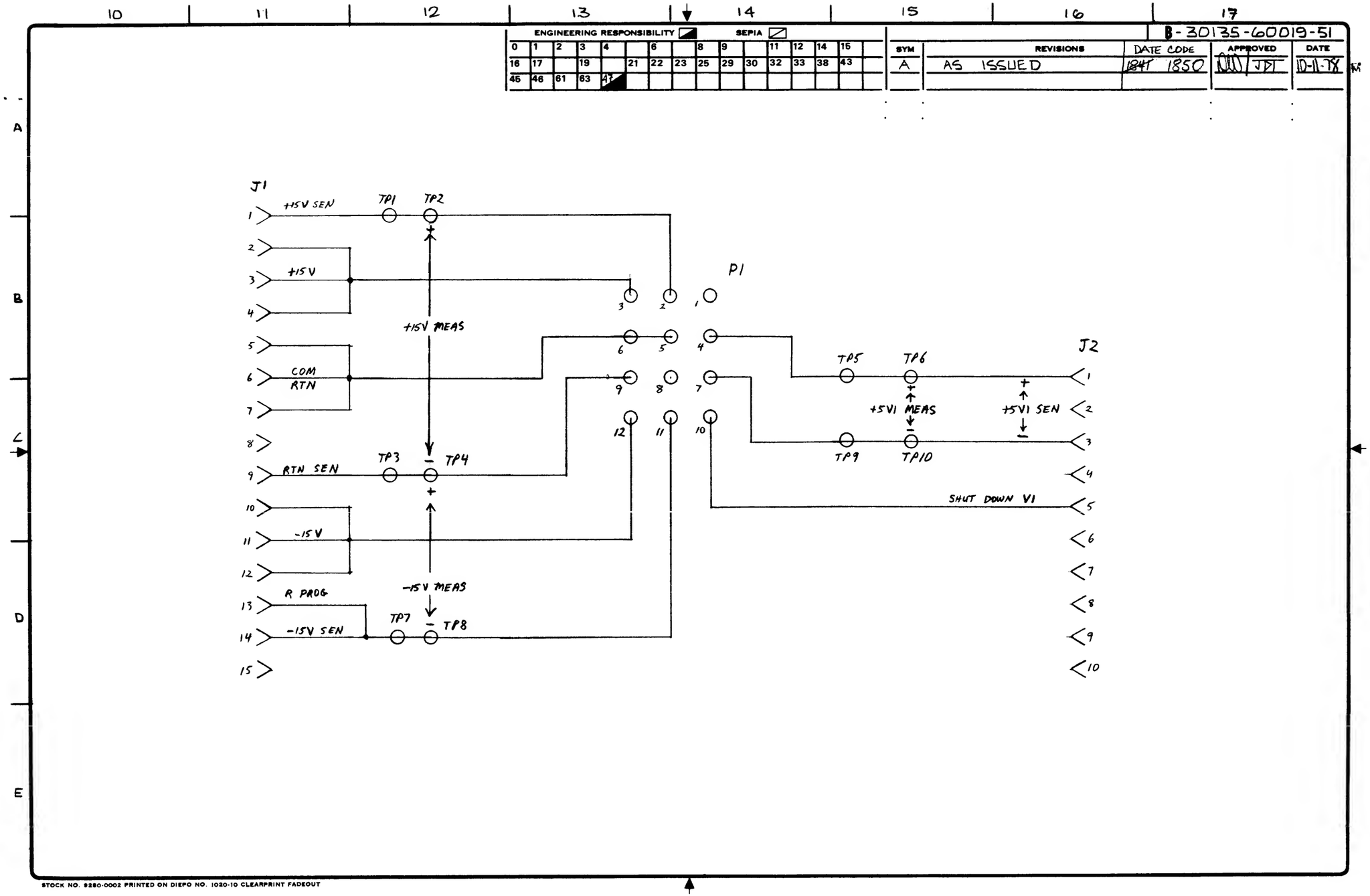

Figure 1-21. P02 Power Distribution PCA (32435A) Sheet 1 of 2

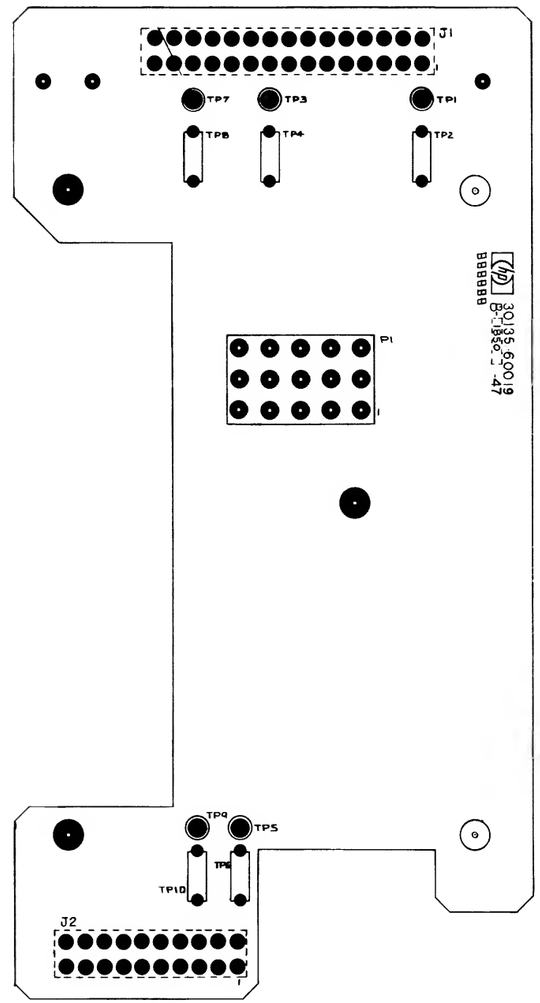

Figure 1-21. P02 Power Distribution PCA (32435A) Sheet 2 of 2

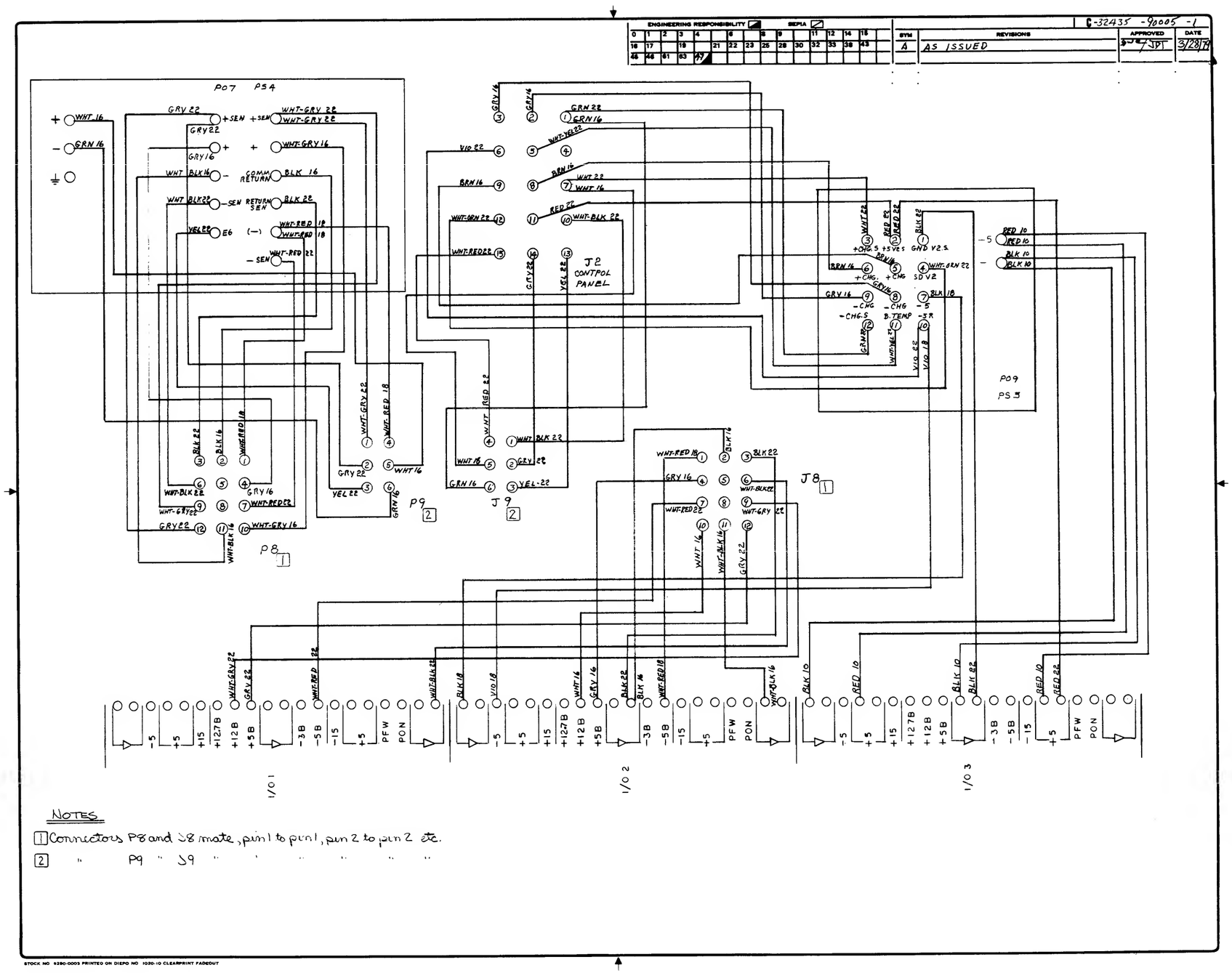

Figure 1-22. P07/P09 System Wiring Diagram (32435A)

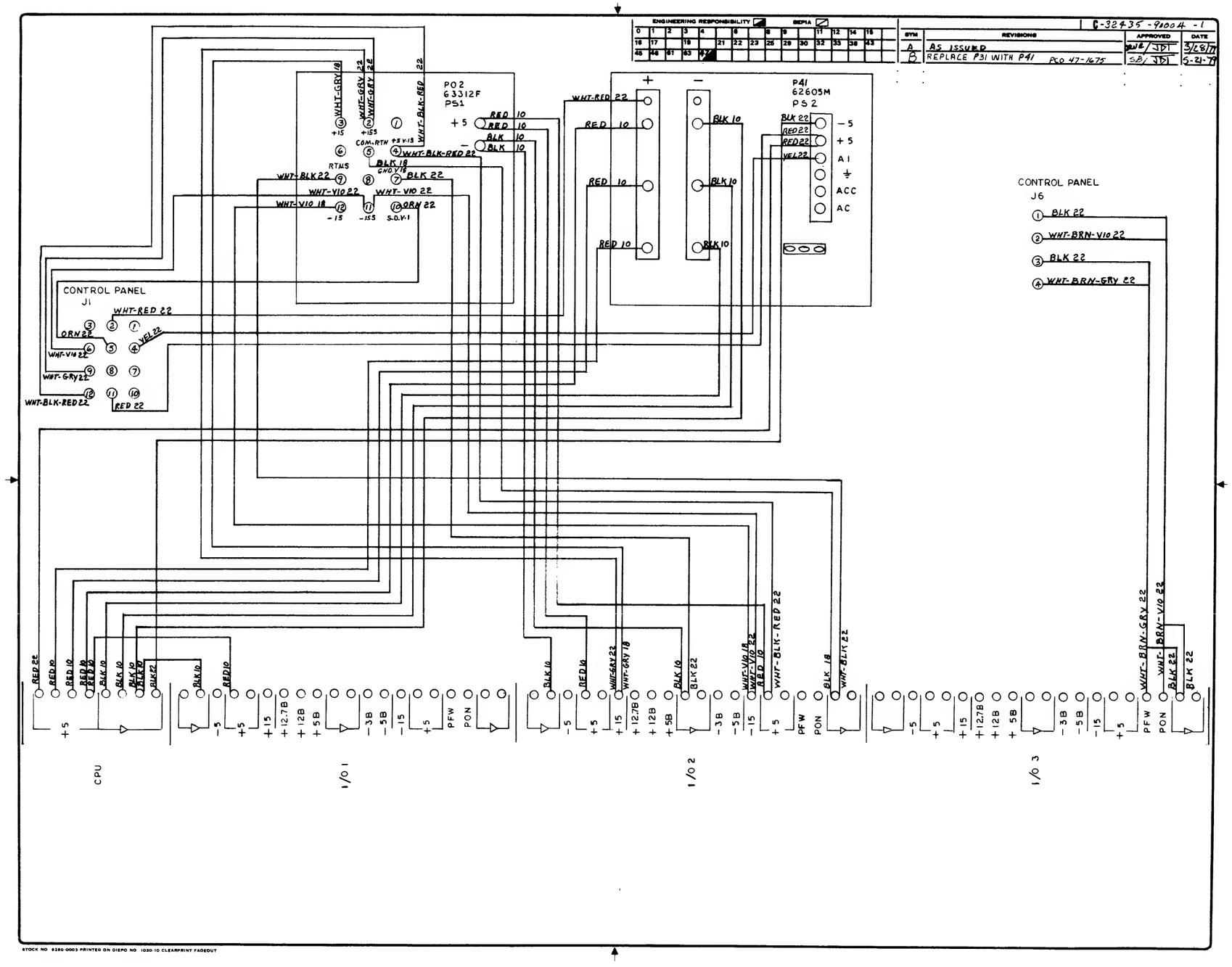

Figure 1-23. P02/P41 System Wiring Diagram (32435A)

BASIC SYSTEM

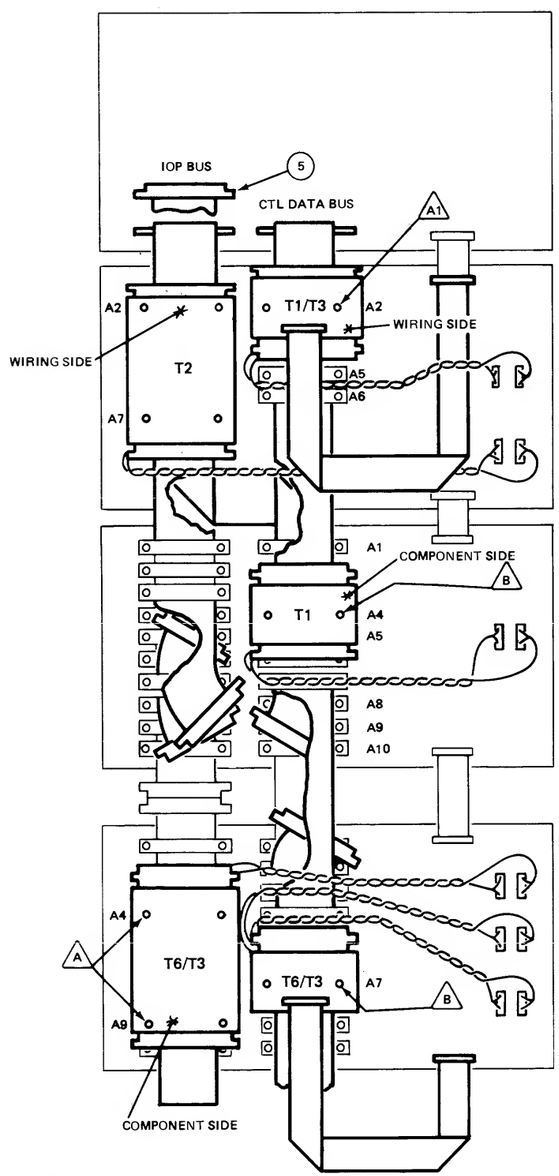

047001-22

OPTION 200

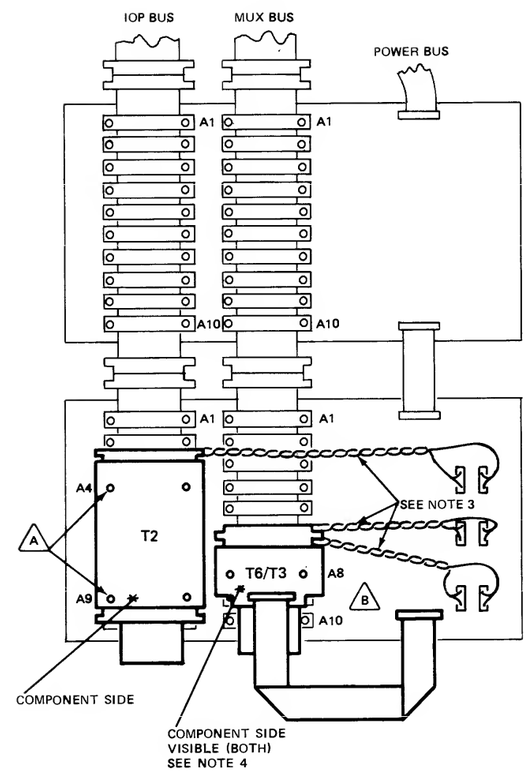

NOTES:

1. TERMINATORS ARE IDENTIFIED AS FOLLOWS:

TERMINATOR	QUANTITY	PART NUMBER
T1	2	30003-60030
T2	2	30001-60016
T3	2	30001-60021
T4	1	30030-60015
T6	1	30035-60003

2. PRINTED CIRCUIT EDGE CONNECTOR J1 OF A TERMINATOR PLUGS INTO A FLAT CABLE CONNECTOR TO TERMINATE THE CABLE RUN. CORRECT TERMINATOR ORIENTATION IS ASSURED IF YOU KEEP PINS 49 AND 50 OF THE EDGE CONNECTOR TO THE LEFT WHEN TERMINATING THE FLAT CABLE.

3. EACH TERMINATOR HAS A RED TWISTED PAIR CABLE WHICH CONNECTS FROM EDGE P1 OF THE TERMINATOR PCA TO PINS 2 AND 1 (+5 VOLTS) ON ANY POWER BUS CONNECTOR P1. A BLACK TWISTED PAIR CABLE CONNECTS FROM THE PCA TO PINS 16 AND 15 OF THE SAME POWER BUS CONNECTOR.

4. T1/T4 = T1 IS BENEATH ; T4 IS VISIBLE.
   T6/T3 = T6 IS BENEATH; T3 IS VISIBLE.

   A = DETAIL A, ITEMS 5,6,8

   A1 = DETAIL A, ITEMS 2,3,5,6,8

   B = DETAIL B

   C = DETAIL C

   D = FLAT CABLE CONNECTORS JOINED WITH EXTENDER BOARDS

5. IF OPTION 200 PRESENT, IOP BUS EXTENDS TO CARD CAGE 5. OTHERWISE, TERMINATES AT T2.

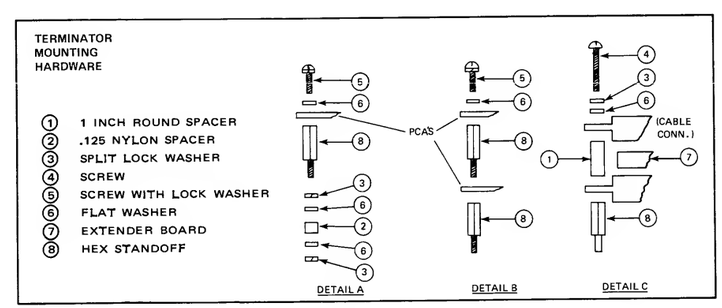

Figure 1-24. Flat Cable Terminators (32435A, with Option 200)

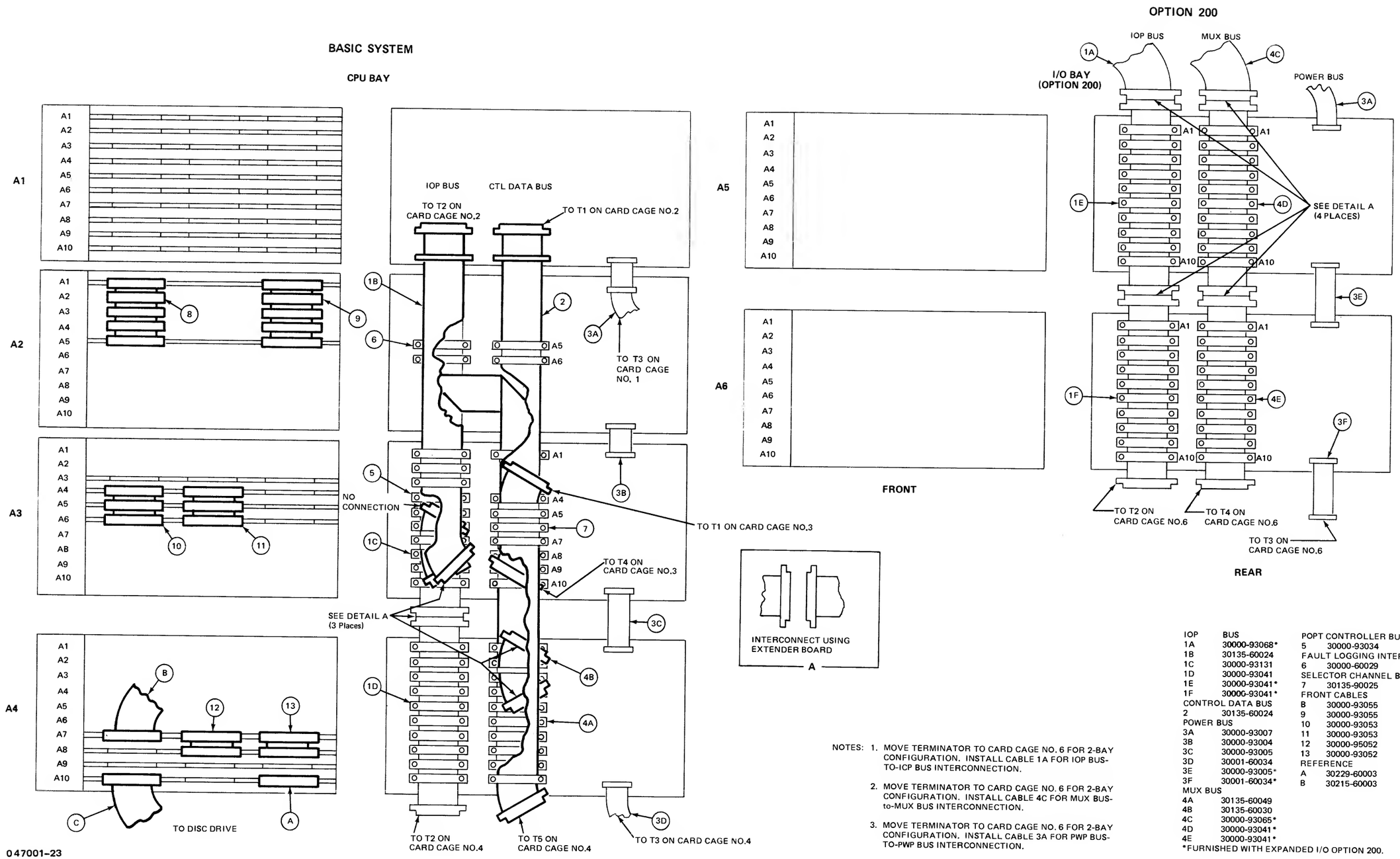

NOTES:

1. MOVE TERMINATOR TO CARD CAGE NO. 6 FOR 2-BAY CONFIGURATION. INSTALL CABLE 1A FOR IOP BUS-TO-ICP BUS INTERCONNECTION.
2. MOVE TERMINATOR TO CARD CAGE NO. 6 FOR 2-BAY CONFIGURATION. INSTALL CABLE 4C FOR MUX BUS-to-MUX BUS INTERCONNECTION.
3. MOVE TERMINATOR TO CARD CAGE NO. 6 FOR 2-BAY CONFIGURATION. INSTALL CABLE 3A FOR PWP BUS-TO-PWP BUS INTERCONNECTION.

IOP	BUS
1A	30000-93068*
1B	30135-60024
1C	30000-93131
1D	30000-93041
1E	30000-93041*
1F	30000-93041*
CONTROL DATA BUS	
2	30135-60024
POWER BUS	
3A	30000-93007
3B	30000-93004
3C	30000-93005
3D	30001-60034
3E	30000-93005*
3F	30001-60034*
MUX BUS	
4A	30135-60049
4B	30135-60030
4C	30000-93065*
4D	30000-93041*
4E	30000-93041*

*FURNISHED WITH EXPANDED I/O OPTION 200.

POPT CONTROLLER BUS	
5	30000-93034
FAULT LOGGING INTERFACE	
6	30000-60029
SELECTOR CHANNEL BUS	
7	30135-90025
FRONT CABLES	
B	30000-93055
9	30000-93055
10	30000-93053
11	30000-93053
12	30000-95052
13	30000-93052
REFERENCE	
A	30229-60003
B	30215-60003

Figure 1-25. System Flat Cables (32435A, with Option 200)

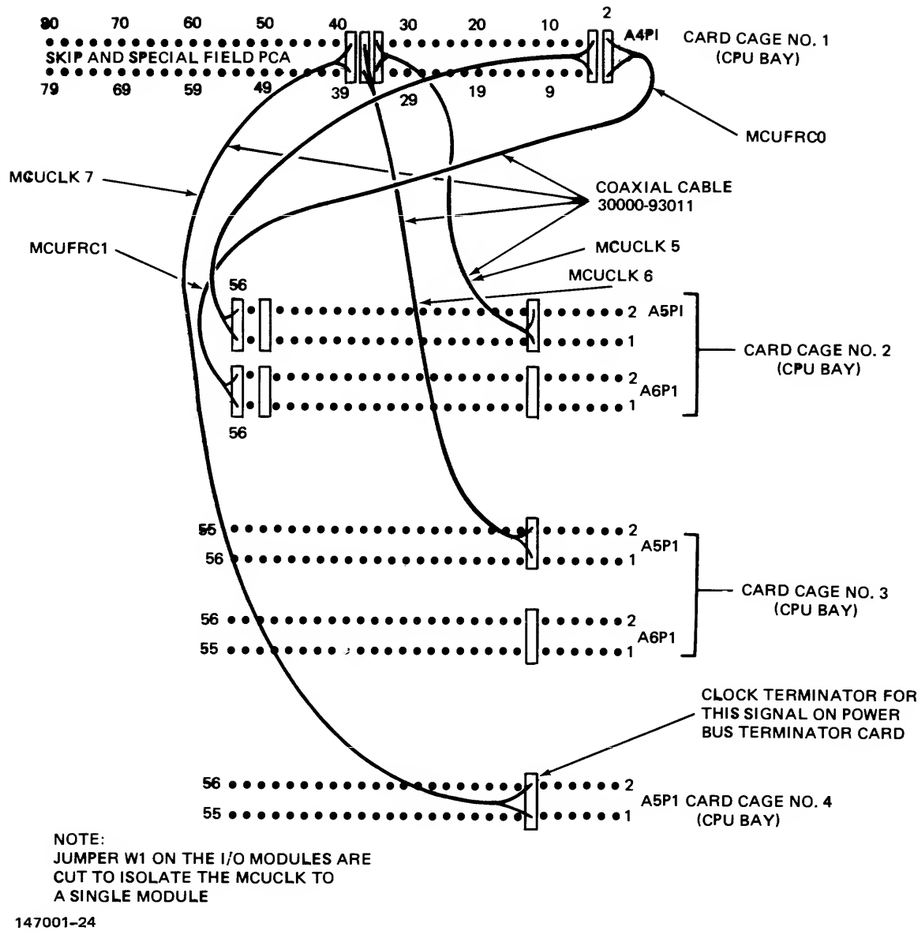

Figure 1-26. CPU Bay Clock Jumpers and Terminators (32435A)

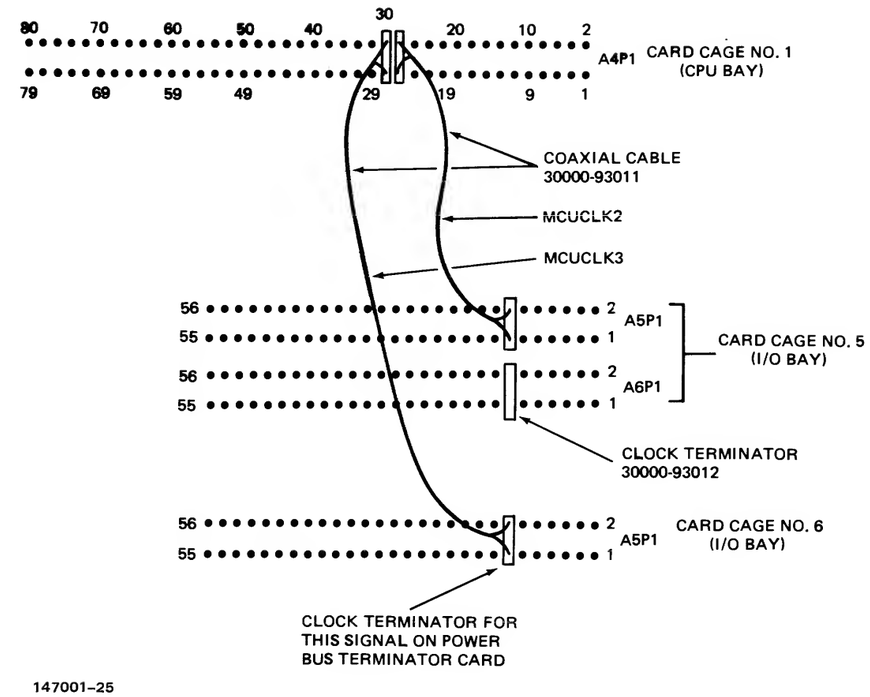

Figure 1-27. I/O Bay Clock Jumpers and Terminators (32435A)

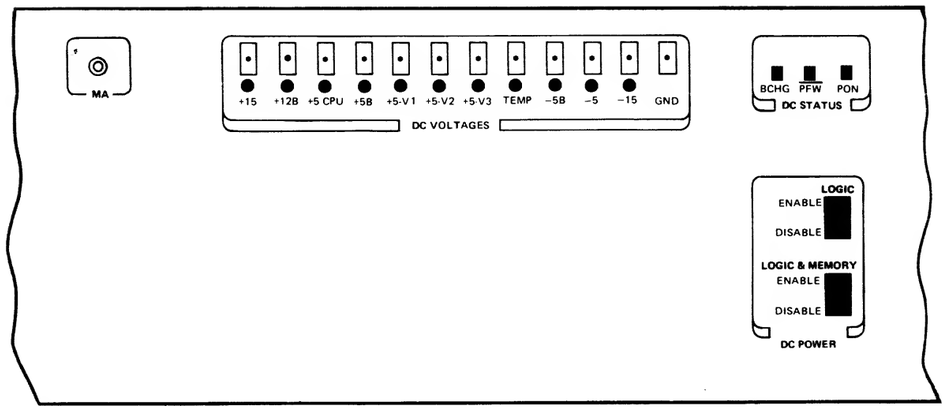

147001-26

Figure 1-28. Power Control and Status Panel (32435A)

Table 1-7. Power Control and Indicator Functions (32435A)

Control or Indicator	Function
BCHG	Lights steady for fully charged battery, blinks slowly while battery is charging, and blinks rapidly when battery is discharging. Remains unlighted when battery is fully discharged or is missing.
PFW	Lights when input AC power to the system is below specified value.
PON	Lights when AC power is applied to the power supplies and the power suplies are operating properly. Turns off when DC voltages decay because of power loss or a power supply fails.
LOGIC	When set to ENABLE, DC power is applied to all PCASs. When set to DISABLE, DC power is removed from all but memory PCAs.
LOGIC AND MEMORY	When set to ENABLE, DC power is applied to all PCAs, provided that the LOGIC switch is set to ENABLE. When set to DISABLE, all DC power is removed from all PCAs.

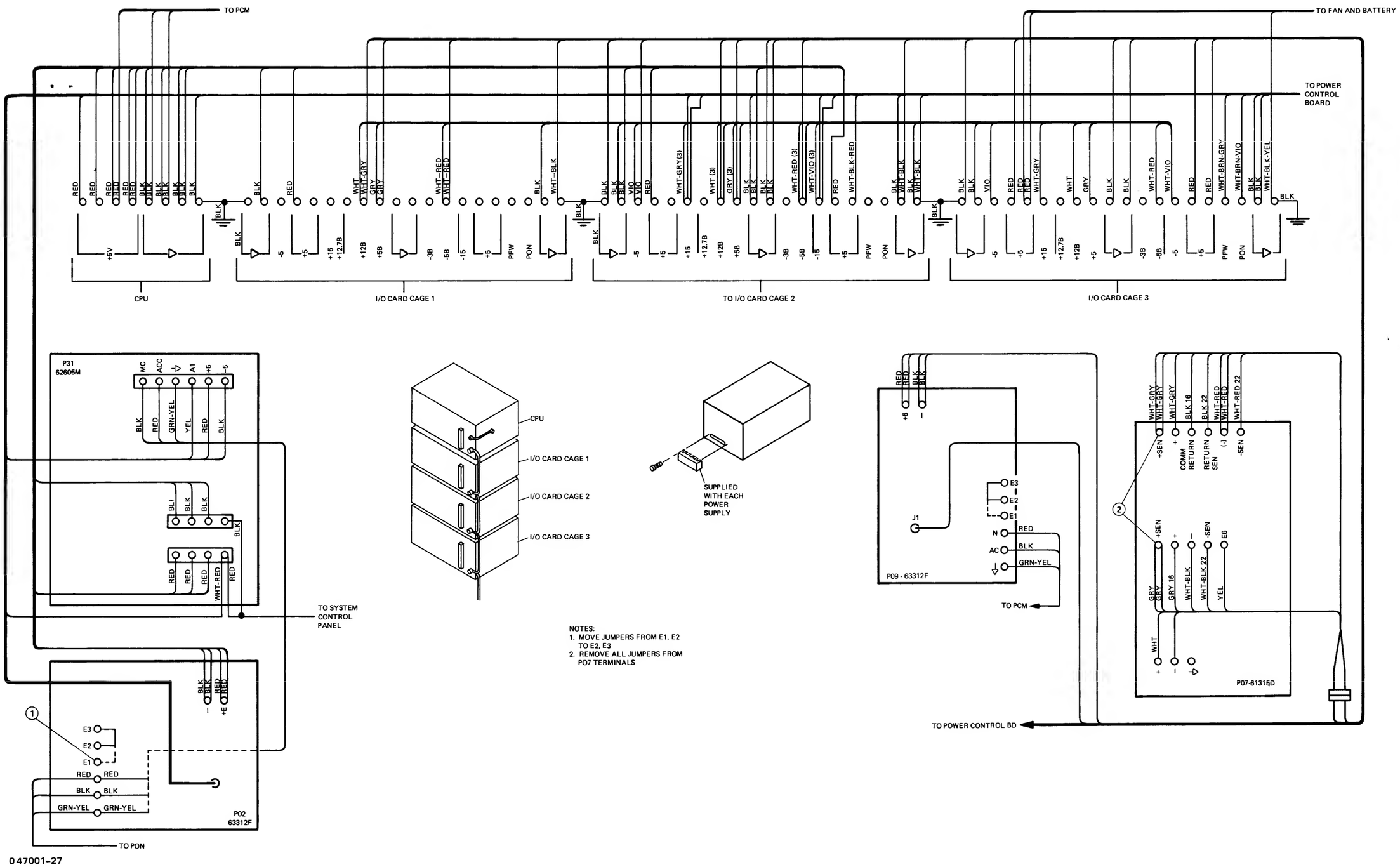

Figure 1-29. CPU Wiring (32435A)

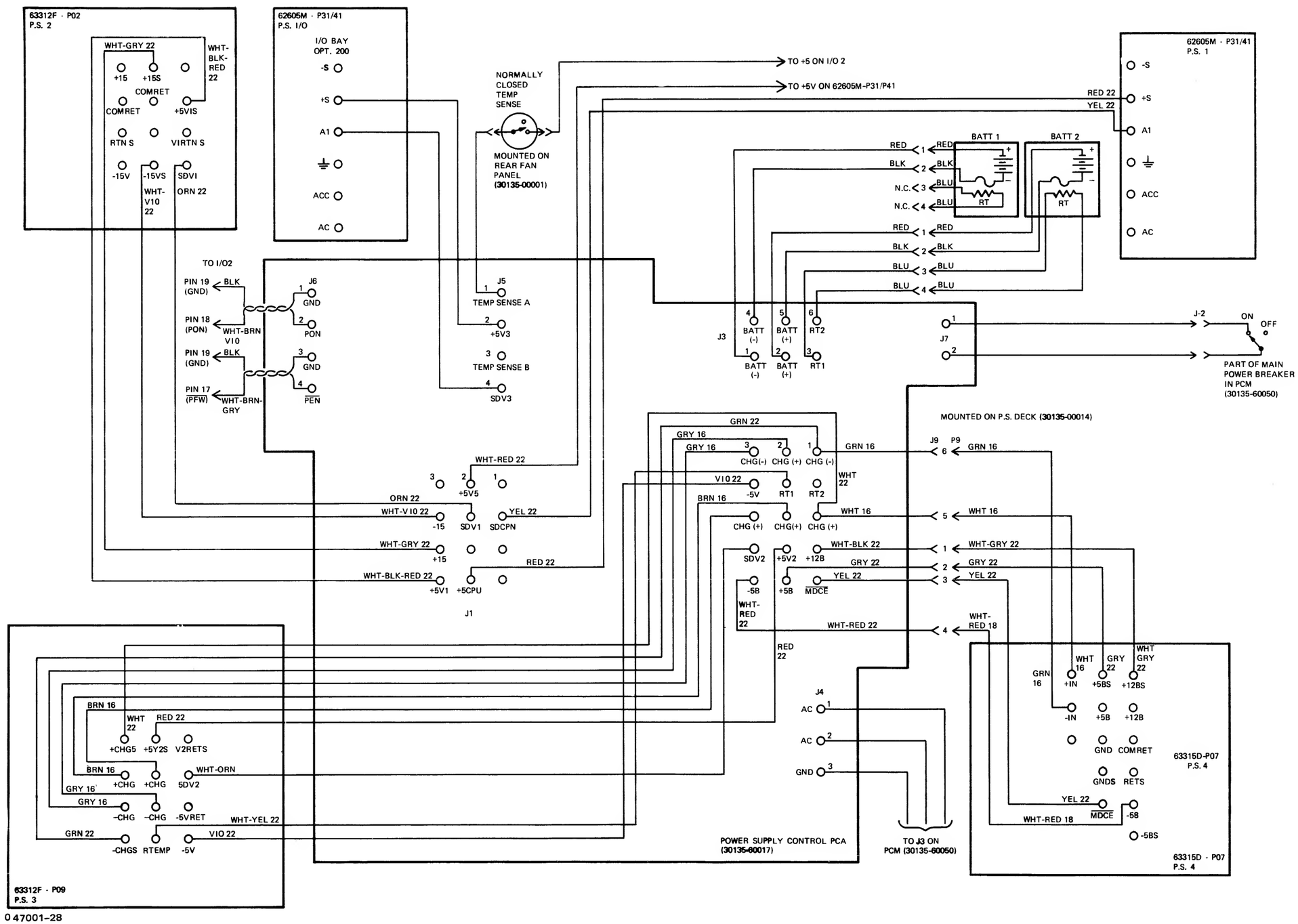

047001-28

Figure 1-30. DC Power Connections (32435A)

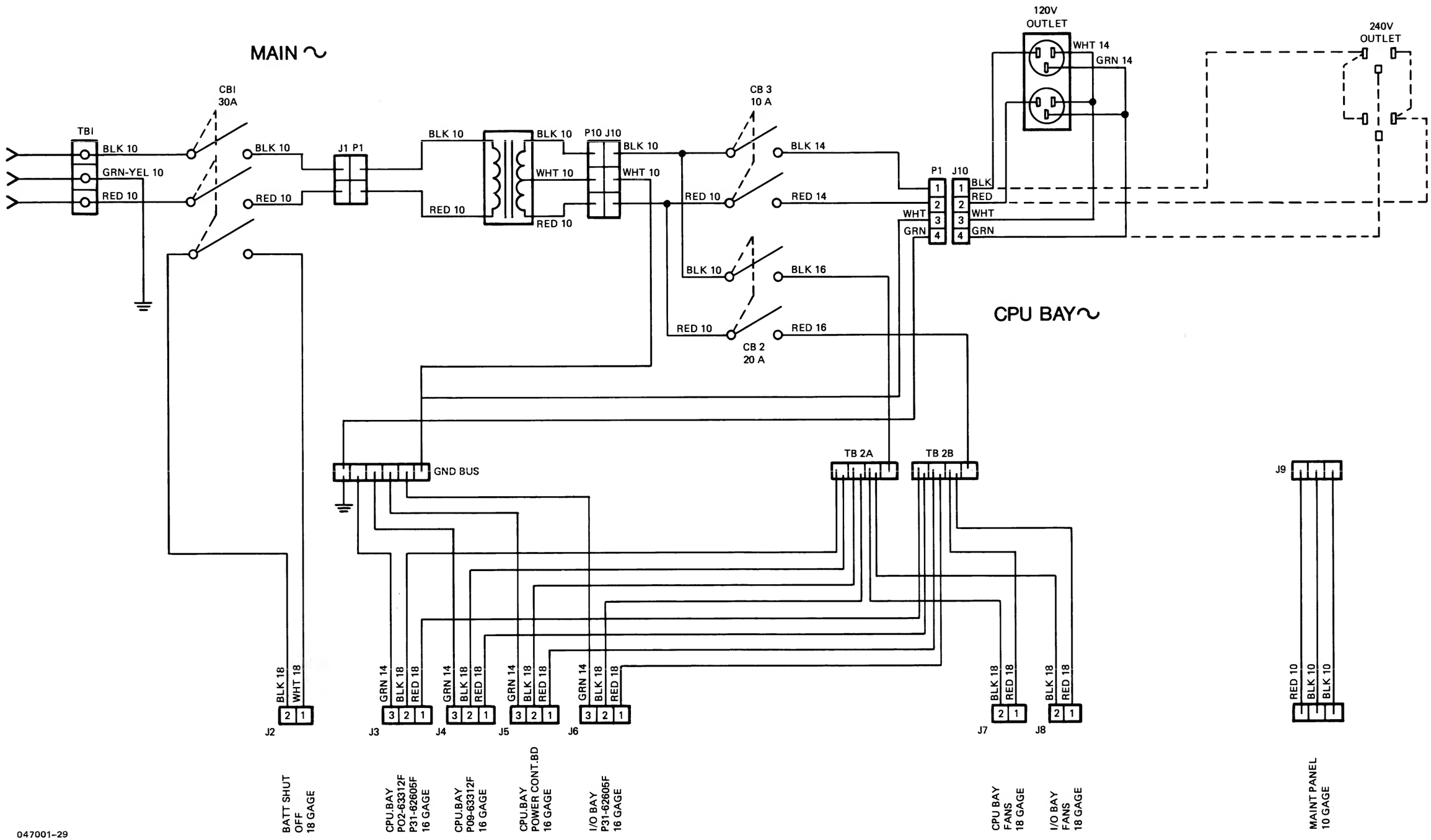

Figure 1-31. AC Power Distribution (32435A)

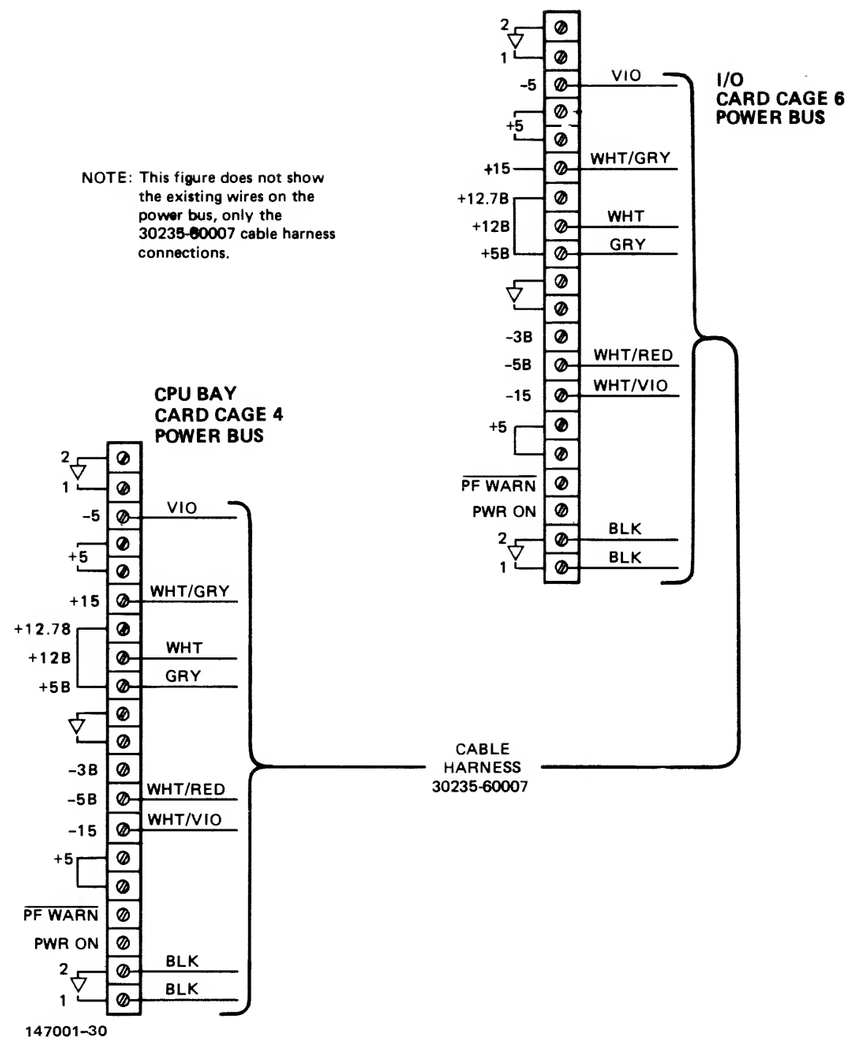

Figure 1-32. Cable Harness, 30235-60007, (32435A, with Option 200)

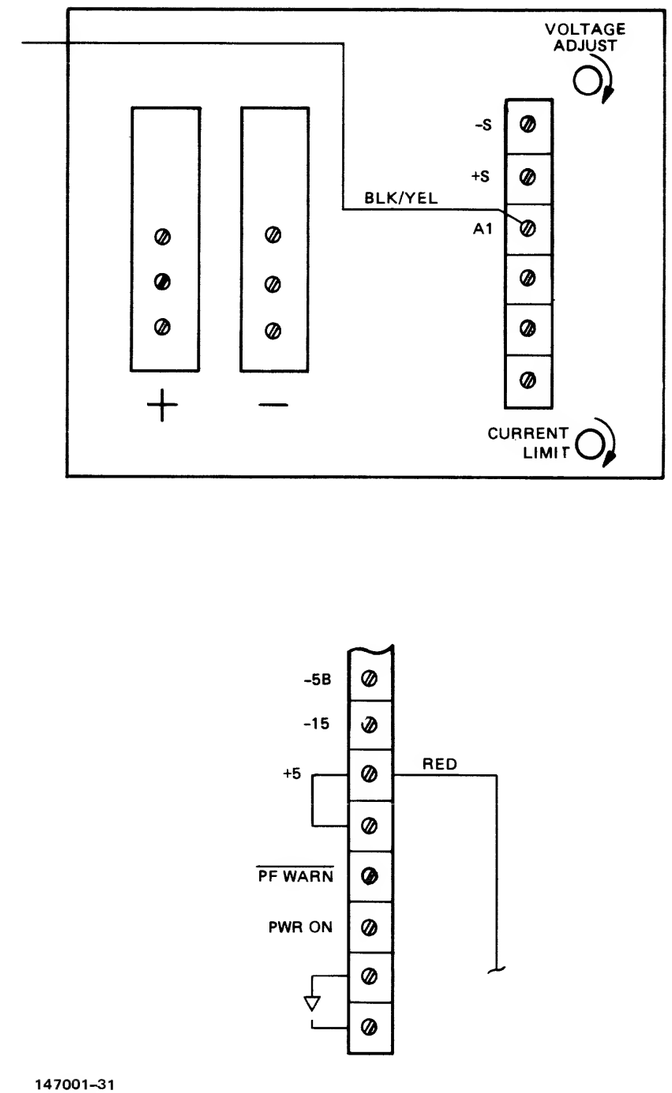

Figure 1-33. Power Bus Connection (32435A, with Option 200)

Table 1-8. CPU Backplane Signal Distribution List

SIGNAL	1A1	1A2	1A3	1A4	1A5	1A6	1A7	1A8	1A9	1A10	BUS
-APE									P2- 7	P2- 7	P2-47
-BPINT	P1*30							P1-32			
-CARRY	P1-65			P1-65	P1*65						
-CF3				P2*18	P2-18						
-CLK	P1-78	P1-78		P1*78	P1-78	P1-78	P1-78	P1-78	P1-78	P1-78	P5- 2
-CLSR				P1*15		P1-15					
-CPUINH									P2-48	P2*48	
-CPULSEL							P1-58		P1*61		
-CPURST	P2-78	P2-78	P2-78	P2-78	P2*78	P2-78	P2-78	P2-78	P2-78		P5-50
-CPURSTS					P2-71			P2*69			
-DATAPE								P1*11	P1-11		
-DCTFRZ									P1-47	P1*47	
-DECSR			P1*22			P1-24		P1-24			
-DEVN00										P2*18	P3- 8
-DEVN01										P2*24	P3- 9
-DEVN02										P2*25	P3-11
-DEVN03										P2*26	P3-12
-DEVN04										P2*27	P3-14
-DEVN05										P2*28	P3-15
-DEVN06										P2*29	P3-17
-DEVN07										P2*30	P3-18
-DISPLAY	P1*68		P1-68	P1-68		P1-68			P1-68		
-ENB									P2*18		
-ERFRZEN	P1*12								P1-12	P1-15	
-EXTRP	P1-37										
-FCLK	P1-79	P1-79	P1-79	P1*79	P1-79	P1-79	P1-79	P1-79	P1-79		P5- 4
-FHB				P1*59	P1-59						
-FIELD6					P1*34			P1-15			
-FIELD8					P1*35					P1-35	
-FIELD9					P1*32			P1-31			
-FRCLK			P1-14	P1*10							
-FRUNCLK	P2-35			P2*32							
-FRZ	P1-51			P1-50					P1*46	P1-46	
-HSREQ										P1-37	P1-12
-INCSR		P1*29				P1-27		P1-27			
-INCT				P2*74			P2-77				
-INTACK										P2-71	P3-50
-INTREQ										P2*65	P3-44
-INTRP1				P2-52				P2*58			
-IOCMD0										P2*11	P3- 4
-IOCMD1										P2*17	P3- 6
-IOCMD2										P2*12	P3- 5
-IOD0										P2*31	P3-20
-IOD1										P2*32	P3-21
-IOD10										P2*49	P3-35

SIGNAL	1A1	1A2	1A3	1A4	1A5	1A6	1A7	1A8	1A9	1A10	BUS
-IOD11										P2*59	P3-36
-IOD12										P2*61	P3-38
-IOD13										P2*62	P3-39
-IOD14										P2*63	P3-41
-IOD15										P2*64	P3-42
-IOD2										P2*33	P3-23
-IOD3										P2*34	P3-24
-IOD4										P2*41	P3-26
-IOD5										P2*42	P3-27
-IOD6										P2*43	P3-29
-IOD7										P2*44	P3-30
-IOD8										P2*45	P3-32
-IOD9										P2*46	P3-33
-IODPRTY										P2* 9	P3- 1
-IOPACT									P1-22	P1-23	
-IORESET					P2*79				P2-79	P2-79	
-IORSTSW					P2-70			P2*68			
-IOSTEP	P1*45									P1-44	
-IOSTROP									P1*17	P1-12	
-IOTIMER									P1*29	P1-29	
-IOX12										P2-66	P3-45
-IOX13										P2-10	P3- 2
-IOX14										P2-67	P3-47
-IOX15										P2-69	P3-48
-JBNDV				P2-66	P2*66						
-JLUT1			P1*18	P1-12							
-JMPFRZ	P1-54			P1*56					P1-31		
-JMPJSB1			P2*23	P2-28			P2-28				
-JSB1			P1*15	P1-11							
-LDACOR							P1-66		P1*66		
-LDDCOR							P1-50		P1*50		
-LSRSPO	P2*23		P2-30								
-MCUCLOR				P1*24							
-MCUCLIR				P1*26							
-MCUCL2R				P1*28							
-MCUCL3R				P1*30							
-MCUCL4R				P1*32							
-MCUCL5R				P1*34							
-MCUCL6R				P1*36							
-MCUCL7R				P1*38							
-MCUCLK0				P1*23							
-MCUCLK1				P1*25							
-MCUCLK2				P1*27							
-MCUCLK3				P1*29							

Table 1-8. CPU Backplane Signal Distribution List (Continued)

SIGNAL	1A1	1A2	1A3	1A4	1A5	1A6	1A7	1A8	1A9	1A10	BUS
-MCUCLK4				P1*31							
-MCUCLK5				P1*33							
-MCUCLK6				P1*35							
-MCUCLK7				P1*37							
-MCUFR1R				P1* 4							
-MCUFRCO				P1* 1							
-MCUFRC1				P1* 3							
-MCURST									P2* 1		P2-49
-MODINH									P2-41		
-MODINHR									P2-42		
-MPIFRZ	P1*34								P1-33		
-NEXT1			P1* 6	P1- 6							
-NOP	P2-38			P2-70				P2*70			
-NOP2				P2*77	P2-77	P2-77			P2-76		
-NXTG			P1-66			P1*67					
-OVFL	P1-53				P1-53	P1*44					
-PADDX						P2-79		P2*79			
-PANLRD	P1-56		P1*56	P1-54							
-PFWARN					P1-24						P1- 2
-PNLS	P2-12		P2-14	P2-14	P2*11						
-POLORSO									P1-26	P1*26	
-RBR1			P1*55	P1=52			P1-28				
-RDIOA							P1*64			P1-64	
-REPN					P2*68		P2-65				
-REVMCUP					P1*43		P1-56				
-ROMFCN1			P2*22			P2-24					
-RORT15			P2*36	P2-36							
-RORT16			P2*38	P2-38							
-RORT21			P2*37		P2-32						
-RSB1			P2* 3	P2- 3							
-SAME				P1-75	P1*77						
-SBR				P2-48		P2*46					
-SETERR					P1*36				P1-36	P1-36	
-SF3				P2*17	P2-17						
-SFQ0						P2-44	P2*44				
-SI									P1*41	P1-41	P1-16
-SIFRZ									P1-34	P1*34	
-SIFRZ									P1-34	P1*34	
-SIOCMP									P1-27	P1*28	
-SLOAD	P1*13				P1-13	P1-13		P1-13	P1-13	P1-13	
-SO										P1*43	P1-18
-SPBBANK				P1-57			P1-62		P1*65		
-STEPENR	P1*38									P1-32	
-STTR						P1*38	P1-38				
-SWLDRAR	P2*13			P2-26				P2-11			

SIGNAL	1A1	1A2	1A3	1A4	1A5	1A6	1A7	1A8	1A9	1A10	BUS
-SYSPE									P2*27	P2- 8	P2-48
-T=0				P1-74	P1*74						
-TESTFRZ									P1-32		
-TINT		P2*56							P2-56		P5-48
-TMRUFRZ					P2*59				P1-45		
-TRO						P1*34	P1-34				
-TR1						P1*35	P1-35				
-TR2						P1*36	P1-36				
-TR3						P1*37	P1-37				
-UNC1			P1* 5	P1- 5							
-V0	P2* 9	P2-11	P2*11					P2* 7			P5-10
-V1	P2*10	P2-12	P2*12					P2* 8			P5-12
-V10	P2*31	P2-31	P2*31					P2*31			P5-30
-V11	P2*32	P2-32	P2*32					P2*32			P5-32
-V12	P2*33	P2-33	P2*33					P2*33			P5-34
-V13	P2*34	P2-34	P2*34					P2*34			P5-36
-V14	P2*41	P2-41	P2*41					P2*41			P5-38
-V15	P2*42	P2-42	P2*42					P2*42			P5-40
-V2	P2*11	P2-13	P2*13					P2* 9			P5-14
-V3	P2*16	P2-16	P2*16					P2*12			P5-16
-V4	P2*18	P2-18	P2*18					P2*18			P5-18
-V5	P2*17	P2-17	P2*17					P2*17			P5-20
-V6	P2*27	P2-27	P2*27					P2*27			P5-22
-V7	P2*28	P2-28	P2*28					P2*28			P5-24
-V8	P2*29	P2-27	P2-29					P2*29			P5-26
-V9	P2*30	P2-30	P2*30					P2*30			P5-28
A0					P2*29		P2-29				
A1					P2*30		P2-30				
A15					P2*34		P2-34				
ALPHA				P2-12		P2*12					
AT01							P1* 1		P1- 1		
AT02							P1*10		P1-10		
B12				P1*24			P1-30				
B13				P1*23			P1-12				
B14	P2- 7			P2* 7			P2- 7				
B15	P2- 8			P2* 8			P2- 8				
BCMP							P2*63	P2-62			
BMCUPRTY								P1-75	P1-75	P1*66	
BMUX								P1* 1			
BNDV	P2-14				P2*27			P2-71			
BPENDING				P2-54				P2*52			
BUSOP1			P1*70						P1-72		
CB14							P2*12			P2- 1	P2-31
CB15							P2*32			P2-73	P2-45
CCPX	P1-16			P1*16	P1-16			P1-16			

Table 1-8. CPU Backplane Signal Distribution List (Continued)

SIGNAL	1A1	1A2	1A3	1A4	1A5	1A6	1A7	1A8	1A9	1A10	BUS
CIR12						P1-58		P1*58			
CIR13						P1-57		P1*62			
CIR14						P1-65		P1*64			
CIR15						P1-66		P1*66			
CIR4						P1-49		P1*49			
CIR7					P1-48			P1*50			
CIR8					P1-56			P1*56			
CLK	P1-67				P1*76	P1-76			P1-42	P1-48	P1-48
CLKENB	P1*61				P1-61						
CMUX	P2-51								P2*64		
CNTRMAX				P2-59			P2*59				
CPUIN								P1-38	P1*38		
CPUSEL							P1-24		P1*24		
CUPTIMER	P1-29				P1*33			P1-29	P1-30		
DATAPOLL										P1* 1	
DISPFLG	P1-46				P1*46			P1-46			
DPOP						P1-72			P1*71		
DS						P2-27		P2*25			
DVSB				P2-56	P2*57						
EMULATOR			P1*30				P1-25		P1-16		
ENABLE									P1-70	P1*62	
ENABLE0								P2-15		P2-40	
ENABLE1								P2-19		P2-41	
ENABLE2								P2-17		P2-42	
ENABLE3								P2-23		P2-43	
ENABLE4								P2*21		P2-44	
ENTIMER	P1*31				P1-31				P1-44		P1- 1
EXTCLK				P1-67							
EXTINT								P1-10		P1*10	
FCLK	P2- 1			P2* 1	P2- 1	P2- 1		P2- 1			
FIELD2					P1*27				P1-14		
FIELD4					P1*29				P1-21		
FIELD5					P1*28				P1-19		
FIELD7					P1*26				P1- 8		
FLAG1	P1-58			P1*58	P1-58						
FLAG2	P1-73			P1*73	P1-73						
FLAG3	P2-37			P2-37	P2*33						
FROM0									P2*16		P2-25
FROM1									P2*22		P2-26
FROM2									P2*12		P2-27
GND											
ICSFLG	P1-47				P1*47		P1-27	P1-47			
ILGADR							P1*29		P1-28		
INCNAMER				P1*13		P1-16					
INCP				P2*19			P2-25				
INDIRECT				P2-73				P2*72			

SIGNAL	1A1	1A2	1A3	1A4	1A5	1A6	1A7	1A8	1A9	1A10	BUS
INTCLKM	P1*64			P1-64							
INTG	P2-22			P2*50				P2-51			
INTPOLL										P1*79	
INTRP	P1-63			P2-51				P2*66			
IOERR									P2-50	P2*50	
IOHR									P2-58	P2*58	
IOHREQ									P2*57	P2-57	
IOHSEL									P2*53	P2-53	
IOINP	P2-49								P2*56	P2-56	
IOLR									P2-70	P2*70	
IOLREG									P2*68	P2-68	
IOLSEL									P2*54	P2-54	
IOMOP0									P2-51	P2*51	
IOMOP1									P2-52	P2*52	
IORESET										P1*33	P1- 8
IOSEL									P2*59		
IOSPE									P2*55	P2-55	
IOTO1									P2-74	P2*74	
IOTO2									P2-72	P2*72	
JLUIM				P2*71				P2-54			
JMP1G	P1-72		P1-77	P1*72							
JMP2G	P1-62		P2-43	P2*45					P2-44		
LDBREG	P1*70			P1-66							
LUTG	P2-79			P2*72				P2-73			
MCUCMP	P1-42							P1*41			
MCUD0							P1*55	P1-55		P1*55	P2- 2
MCUD1							P1*59	P1-59		P1*59	P2- 3
MCUD10							P1*76	P1-76		P1*76	P2-13
MCUD11							P1*70	P1-70		P1*70	P2-15
MCUD12							P1*68	P1-68		P1*68	P2-16
MCUD13							P1*73	P1-73		P1*73	P2-17
MCUD14							P1*71	P1-71		P1*71	P2-18
MCUD15							P1*77	P1-77		P1*77	P2-19
MCUD2							P1*57	P1-57		P1*57	P2- 4
MCUD3							P1*63	P1-63		P1*63	P2- 5
MCUD4							P1*61	P1-61		P1*61	P2- 6
MCUD5							P1*65	P1-65		P1*65	P2- 7
MCUD6							P1*69	P1-69		P1*69	P2- 9
MCUD7							P1*67	P1-67		P1*67	P2-10
MCUD8							P1*74	P1-74		P1*74	P2-11
MCUD9							P1*72	P1-72		P1*72	P2-12
MCUDPRTY							P1*75			P1*75	P2-20
MCUERR								P1-25	P1*25		
MCUFRZ						P1-37			P1*18		
MEMREF							P1-48	P1*48			

Table 1-8. CPU Backplane Signal Distribution List (Continued)

SIGNAL	1A1	1A2	1A3	1A4	1A5	1A6	1A7	1A8	1A9	1A10	BUS
MODINT								P1- 9	P1* 7		
MOP0									P2*14		P2-28
MOP1									P2*10		P2-29
MPIC0	P2* 5			P2-47							
MPIC1	P2* 6			P2- 6							
NAMER0						P1*25					
NAMER1						P1*26					
NEXT				P2*43	P2-41		P2-42	P2-44			
NIP	P1-43							P1-43	P1*43		
NIP0									P1* 9		
NIPSEL									P1*64		
NIRTOCIR				P1*49				P1-37	P1-37		
NOP2	P2-76			P2*76	P2-76		P2-76				
NOTUSED											P1-10
NUMERIC				P2-16		P2*17					
NXT+1	P2-59			P2*67		P2-64		P2-67			
OFCENB				P2-69	P2*69						
OPINP	P1-35							P1-35	P1*35		
OPNDSEL									P1*63		
OVFLINT				P1*63				P1-26			
PADDIN10						P2-57		P2*57			
PADDIN11						P2-59		P2*59			
PADDIN8						P2-53		P2*53			
PADDIN9						P2-55		P2*55			
PADDSUB						P2-61		P2*61			
PADDXS00						P2-63		P2*63			
PADDXS01						P2-65		P2*65			
PAUSE								P1*45			
PONB					P2*74	P2-76		P2-74			
PONUB				P2-41	P2*45						
PWRFAIL					P1*30			P1-30			
PWRON					P1-25						P1- 6
QASL					P2*64		P2-64				
QASR					P2*62	P2-62					
QDWN						P1*31	P1-31				
QS				P2-29		P2-29		P2*26			
R0		P1*12			P1-12	P1*12					
R1		P1*11			P1-11	P1*11					
R10		P2* 8			P2- 8	P2* 8					
R11		P2* 7			P2- 7	P2* 7					
R12		P2*47			P2-47	P2*47					
R13		P2*48			P2-48	P2*48					
R14		P2*49			P2-49	P2*49					
R15		P2*51			P2-51	P2*51					
R2		P1* 9			P1- 9	P1* 9					

SIGNAL	1A1	1A2	1A3	1A4	1A5	1A6	1A7	1A8	1A9	1A10	BUS
R3			P1*10		P1-10	P1*10					
R4			P1*61		P1-61	P1*61					
R5			P1*62		P1-62	P1*62					
R6			P1*63		P1-63	P1*63					
R7			P1*64		P1-64	P1*64					
R8			P2*10		P2-10	P2*10					
R9			P2* 9		P2- 9	P2* 9					
RARGA		P2-47	P2-46	P2*46							
RARGB		P2-15	P2-15	P2*15							
RDCIR						P1*28		P1-28			
RDCPX1							P2*43	P2-43	P2-43		
RDCPX2							P2*45	P2-45			
RDIOD							P2*47			P2-47	
RDMOD							P2*46		P2-46		
RDOPND							P2*49	P2-49	P2-49		
RDSWITCH							P2*50	P2-50			
READY0									P2*31		P2-33
READY1									P2*32		P2-34
READY2									P2* 9		P2-35
READY3									P2*29		P2-36
READY4									P2*13		P2-37
READY5									P2*11		P2-38
READY6									P2*30		P2-31
REPEAT		P2-21		P2*21							
REVSYSP					P1*38				P1-73		
RF0		P2*56	P2*56			P2*56					
RF1		P2*54	P2*54			P2*54					
RF2		P2*52	P2*52			P2*52					
RF3		P2*50	P2*50			P2*50					
RFSAME					P2-58	P2*58					
RMOP0		P2- 3							P2*33		
RMOP1		P2- 4							P2*34		
ROM0			P1* 4	P1* 4							P4- 2
ROM1			P1* 3	P1* 3							p4- 3
ROM10			P1*32	P1*32							P4-17
ROM11			P1*33	P1*33							P4-18
ROM12			P1*35	P1*35							P4-20
ROM13			P1*34	P1*34							P4-21
ROM14			P1*36	P1*36							P4-23
ROM15			P1*38	P1*38							P4-24
ROM16			P1*41	P1*41							P4-27
ROM17			P1*42	P1*42							P4-28
ROM18			P1*43	P1*43							P4-30
ROM19			P1*44	P1*44							P4-31
ROM2			P1*21	P1*21							P4- 5

Table 1-8. CPU Backplane Signal Distribution List (Continued)

SIGNAL	1A1	1A2	1A3	1A4	1A5	1A6	1A7	1A8	1A9	1A10	BUS
ROM20		P1*45	P1*45								P4-33
ROM21		P1*46	P1*46								P4-34
ROM22		P1*47	P1*47								P4-36
ROM23		P1*48	P1*48								P4-37
ROM24		P1*51	P1*51								P4-39
ROM25		P1*52	P1*52								P4-40
ROM26		P1*53	P1*53								P4-42
ROM27		P1*54	P1*54								P4-43
ROM28		P1*65	P1*65								P4-45
ROM29		P1*67	P1*67								P4-46
ROM3		P1*24	P1*24								P4- 6
ROM30		P1*69	P1*69								P4-48
ROM31		P1*71	P1*71								P4-49
ROM4		P1*23	P1*23								P4- 8
ROM5		P1*25	P1*25								P4- 9
ROM6		P1*27	P1*27								P4-11
ROM7		P1*26	P1*26								P4-12
ROM8		P1*28	P1*28								P4-14
ROM9		P1*31	P1*31								P4-15
ROMENB		P2- 6	P2- 6								P5- 8
ROMFNCT2				P1*67						P1-67	
ROR10			P1*72	P1-66							
ROR11			P1*73	P1-68							
ROR12			P1*74	P1-71							
ROR13			P1*75	P1-72							
ROR14			P1*76	P1-75							
ROR23			P2* 5	P2- 5							
ROR24			P2*24	P2-24							
RORT10	P2-44			P2*44							
RORT11	P2-43			P2*43							
RORT12	P2-24			P2*24							
RORT13	P2-25			P2*25							
RORT14	P2-46			P2*46							
RORT15	P2-53		P2*53	P2-53			P2-53				
RORT16	P2-55		P2*55	P2-55			P2-55				
RORT17	P2-58		P2*58	P2-58			P2-58				
RORT18	P2-57		P2*57	P2-57			P2-57				
RORT19	P2-62		P2*62	P2-62			P2-62				
RORT20	P1-57		P1*57		P1-57						
RORT21	P1-49		P1*49		P1-49						
RORT22	P1-50		P1*50		P1-50						
RORT23	P2-61		P2*61	P2-61						P2-61	
RORT24	P2-63		P2*63	P2-63						P2-63	
RORT25	P2-64		P2*64	P2-64						P2-64	
RORT26	P2-65		P2*65	P2-65						P2-65	

SIGNAL	1A1	1A2	1A3	1A4	1A5	1A6	1A7	1A8	1A9	1A10	BUS
RORT27	P2-77		P2*77	P2-75					P2-77		
RPTFCN				P2-10	P2*12						
RREGO				P1-51	P1*42						
RUNFF	P1-36						P1-26	P1*34			
SO					P1- 3	P1* 3	P1* 3	P1* 3	P1* 3	P1* 3	
S1					P1- 4	P1* 4	P1* 4	P1* 4	P1* 4	P1* 4	
S10					P2- 5	P2* 5	P2* 5	P2* 5	P2* 5	P2* 5	
S11					P2- 6	P2* 6	P2* 6	P2* 6	P2* 6	P2* 6	
S12					P2-38	P2*38	P2*38	P2*38	P2*38	P2*38	
S13					P2-37	P2*37	P2*37	P2*37	P2*37	P2*37	
S14					P2-36	P2*36	P2*36	P2*36	P2*36	P2*36	
S15					P2-35	P2*35	P2*35	P2*35	P2*35	P2*35	
S2					P1- 5	P1* 5	P1* 5	P1* 5	P1* 5	P1* 5	
S3					P1- 6	P1* 6	P1* 6	P1* 6	P1* 6	P1* 6	
S4					P1-54	P1*54	P1*54	P1*54	P1*54	P1*54	
S5					P1-53	P1*53	P1*53	P1*53	P1*53	P1*53	
S6					P1-52	P1*52	P1*52	P1*52	P1*52	P1*52	
S7					P1-51	P1*51	P1*51	P1*51	P1*51	P1*51	
S8					P2- 3	P2* 3	P2* 3	P2* 3	P2* 3	P2* 3	
S9					P2- 4	P2* 4	P2* 4	P2* 4	P2* 4	P2* 4	
SAVEG	P2-45		P2-44	P2*44							
SCMD	P1-52										P1*50
SDFG				P1*71	P1-70						
SF0	P2*66		P2*66			P2*66	P2-66				
SF1	P2*68		P2*68			P2*68	P2-68				
SF2	P2*70		P2*70			P2*70	P2-70				
SF3	P2*72		P2*72			P2*72	P2-72				
SF4	P2*74		P2*74			P2*74	P2-74				
SFSAME					P2-28		P2*28				
SHIFTCLK	P1*23				P1-23	P1-23		P1-23	P1-23	P1-24	
SIFG				P1*69	P1-69						
SIODR	P1-48									P1*49	
SIODR	P1-24									P1*30	
SIOMAP	PR-25									P1*31	
SIOP	P1- 9									P1* 9	
SKIP	P2-26		P2-26	P2*27		P2-26					
SKIPNOP1			P1*13	P1- 9							
SMCO	P1-27							P1*33			
SP1 0					P1- 1	P1* 1	P1- 9				
SP115					P2-31	P2*30					
SP1IN					P2*42	P2-42					
SP1SHIFT					P1*45	P1-45					
SP3 0					P2-54		P2*54				
SP315					P2-26	P2-25	P2*26				
SP3IN					P1*15		P1-15				

Table 1-8. CPU Backplane Signal Distribution List (Continued)

SIGNAL	1A1	1A2	1A3	1A4	1A5	1A6	1A7	1A8	1A9	1A10	BUS
SP3SHIFT					P2*61		P2-61				
SPCLNOP1			P2*25	P2-25							
SPETFM	P1-66								P2*66		
SR0				P2-34		P2*34		P2-47			
SR1				P2-33		P2*33		P2-48			
SR2				P2-31		P2*31		P2-46			
SRBUS	P1-44					P1*44					
SRDYENB	P1-69								P1*69		
SRREG	P1-71				P2*52						
SSBUS	P1-41					P1*41					
SSREG	P1-76				P2*50						
ST0	P2*67		P2*67			P2-67	P2-67				
ST1	P2*69		P2*69			P2-69	P2-69				
ST2	P2*71		P2*71			P2-71	P2-71				
ST3	P2*73		P2*73			P2-73	P2-73				
ST4	P2*75		P2*75			P2-75	P2-75				
STATUS0				P1*41	P1-41		P1-41				
STATUS1				P1*42			P1-42		P1-42	P1-42	
STATUS2				P1*43			P1-43				
STATUS3				P1*44			P1-44	P1-44			
STATUS4				P1*45			P1-45				
STATUS5				P1*46			P1-46				
STATUS6				P1*47			P1-47				
STATUS7				P1*48			P1-48				
STBUSOP				P1-62					P1*62		
STIOA							P1*11			P1-11	
STIOD							P1*16			P1-16	
STORAR				P1-70		P1*70					
STSTATUS				P2-79			P2*79	P2-77			
SUBF	P2-48			P2*49							
SUBUS	P1-55					P1*55					
SYSPIN							P1-49		P1-49		
SYSPRTY							P2* 9		P2- 8		P2-32
T0				P1-55	P1*55						
TNAMP00	P1-32					P1*32	P1-32				
TNAMP01	P1-33					P1*33	P1-33				
T00									P2*28		P2-22
T01									P2*24		P2-23
T02									P2*26		P2-24
U0	P1- 8			P1- 8	P1* 8	P1- 8	P1- 8	P1- 8		P1- 8	
U1	P1-14			P1-14	P1*14	P1-14	P1-14	P1-14		P1-14	
U10					P2*15	P2-15	P2-15	P2-15	P1-55	P2-15	
U11					P2*16	P2-16	P2-16	P2-16	P1-56	P2-16	
U12					P2*19	P2-19	P2-19	P2-19		P2-19	
U13					P2*21	P2-21	P2-21	P2-21	P1-57	P2-21	

SIGNAL	1A1	1A2	1A3	1A4	1A5	1A6	1A7	1A8	1A9	1A10	BUS
U14	P2-19			P2-22	P2*22	P2-22	P2-22	P2-22	P1-58	P2-22	
U15				P2-23	P2*23	P2-23	P2-23	P2-23	P1-59	P2-23	
U2				P1- 7	P1* 7	P1- 7	P1- 7	P1- 7		P1- 7	
U3				P1-17	P1*17	P1-17	P1-17	P1-17		P1-17	
U4				P1-18	P1*18	P1-18	P1-18	P1-18		P1-18	
U5				P1-19	P1*19	P1-19	P1-19	P1-19		P1-19	
U6				P1-21	P1*21	P1-21	P1-21	P1-21		P1-21	
U7				P1-22	P1*22	P1-22	P1-22	P1-22		P1-22	
U8				P2-13	P2*13	P2-13	P2-13	P2-13		P2-13	
U9					P2*14	P2-14	P2-14	P2-14		P2-14	
UGATF	P2-36			P2*35				P2-24			
VBUSENB	P1-74	P2- 4	P2- 4	P2- 4				P2-10			P5- 6
W								P2*76			
XSW12							P1-13				
XSW13							P1-23				
XSW14	P1*75			P2-11			P2-11				
XSW15	P1*77			P1-77			P2-10				

Table 1-9. IOP Power Bus (non-Memory Card Cage)

PIN NUMBER 56-PIN	PIN NUMBER 20-PIN	SIGNAL	PIN NUMBER 56-PIN	PIN NUMBER 20-PIN	SIGNAL
1		+5V	30		
2		+5V	31		Not used
3		+5V	32		Not used
4		+5V	33		Not used
5		PF WARN	34		Not used
6	1	ENTIMER	35		Not used
7	4	Spare	36		Not used
8	3	Spare	37		Not used
9	6	PWR ON	38		Not used
10	5	PWR ON	39		Not used
11	8	IORESET	40		Not used
12	7	IORESET	41	12	HSREQ
13	10	MCUCLKS 2	42	11	
14	9	MCUCKKS	43		1
15			44		1
16			45		IODPE
17		-5V	46		
18		-5V	47		1
19			48		1
20			49	16	SI
21			50	15	SI
22			51		1
23		Not used	52		1
24		Not used	53	18	SO
25		Not used	54	17	SO
26		Not used		55	1
27		Not used	56		1
28		Not used		20	Not used
29				19	Not used

1 Reserved for interrupt and data poll connections at backplane.
2 On pin 10 of 20-pin connector but isolated from other card cages by removal of resistor R1.

Table 1-10. Central Data Bus

PIN	SIGNAL	PIN	SIGNAL
1	COM	26	FROM1
2	MCUD0	27	FROM2
3	MCUD1	28	MOP0
4	MCUD2	29	MOP1
5	MCUD3	30	COM
6	MCUD4	31	CB14
7	MCUD5	32	SYSPRTY
8	COM	33	READY0
9	MCUD6	34	READY1
10	MCUD11	35	READY2
11	MCUD8	36	READY3
12	MCUD9	37	READY4
13	MCUD10	38	READY5
14	COM	39	COM
15	MCUD11	40	ENABLE0
16	MCUD12	41	ENABLE1
17	MCUD13	42	ENABLE2
18	MCUD14	43	ENABLE3
19	MCUD15	44	ENABLE4
20	MCUDPRTY	45	CB15
21	COM	46	COM
22	T00	47	APE
23	T01	48	SYSPE
24	T02	49	MCUDRST
25	FROM0	50	COM

NOTE: CPU/IOP Connector P2

Table 1-11. IOP Bus

PIN	SIGNAL	PIN	SIGNAL
1	IODPRTY	26	IOD4
2	IOX13	27	1OD5
3		28	
4	IOCMD0	29	IOD6
5	IOCMD1	30	IOD7
6	IOCMD1	31	
7		32	IOD8
8	DEVN00	33	IOD9
9	DEVN01	34	
10		35	IOD10
11	DEVN02	36	IOD11
12	DEVN03	37	
13		38	IOD12
14	DEVN04	39	IOD13
15	DEVN05	40	
16		41	IOD14
17	DEVN06	42	IOD15
18	DEVN07	43	
19		44	INTREQ
20	IOD0	45	IOX12
21	IOD1	46	
22		47	IOX14
23	IOD2	48	IOX15
24	IOD3	49	
25		50	INTACK

NOTE: CPU/IOP connector P3

Table 1-12. Current Instruction Register Connector A8J1

PIN	SIGNAL	PIN	SIGNAL
1		26	CIR6 Buffered
2	SYSSWREG0	27	CIR7 Buffered
3	SYSSWREG1	28	PON Buffered
4	SYSSWREG2	29	CIR8 Buffered
5	SYSSWREG3	30	CIR9 Buffered
6	SYSSWREG4	31	CIR10 Buffered
7	SYSSWREG5	32	CIR11 Buffered
8	SYSSWREG6	33	CIR12 Buffered
9	SYSSWREG7	34	CIR13 Buffered
10		35	CIR14 Buffered
11	SYSSWREG8	36	CIR15 Buffered
12	SYSSWREG9	37	
13	SYSSWREG10	38	$\overline{\text{INHAR}}$
14	SYSSWREG11	39	SYSHFF
15	SYSSWREG12	40	RUNFF
16	SYSSWREG13	41	
17	SYSSWREG14	42	$\overline{\text{RUNSW}}$
18	SYSSWREG15	43	
19		44	$\overline{\text{LDSW}}$
20	CIR0 Buffered	45	
21	CIR1 Buffered	46	$\overline{\text{DUMPSW}}$
22	CIR2 Buffered	47	
23	CIR3 Buffered	48	$\overline{\text{IORSTSW}}$
24	CIR4 Buffered	49	
25	CIR5 Buffered	50	$\overline{\text{CPURST}}$

NOTE: Connector A8J1 is cabled to the system control panel on the front door.

Table 1-13. Current Instruction Register Connector A8J2

PIN	SIGNAL	PIN	SIGNAL
1		26	LDREG
2	PANELSWREG0	27	LDADDR
3	PANELSWREG1	28	
4	PANELSWREG2	29	DISPMEM
5	PANELSWREG3	30	LDMEM
6	PANELSWREG4	31	
7	PANELSWREG5	32	EXECUTE
8	PANELSWREG6	33	SINGLE
9	PANELSWREG7	34	
10		35	INCRADDRR
11	PANELSWREG8	36	DECADDR
12	PANELSWREG9	37	
13	PANELSWREG10	38	Not used
14	PANELSWREG11	39	SYSHALTFF
15	PANELSWREG12	40	RUNFF
16	PANELSWREG13	41	
17	PANELSWREG14	42	RUNSW
18	PANELSWREG15	43	
19		44	LDSW
20	Not used	45	
21	Not used	46	DUMPSW
22		47	
23	PSRENB	48	IORTSW
24	INHRINT	49	
25		50	CPURST

NOTE: Connector A8J2 is cabled to A1J2 of the CPU card cage when using the maintenance panel.

Table 1-14. Multiplexer Channel Bus

PIN	SIGNAL	PIN	SIGNAL
1	CHANSO	26	SR10
2		27	SR11
3	SRCLOCK	28	SR12
4		29	SR13
5	DEVEND	30	
6		31	SR14
7	ACKSR	32	SR15
8		33	SR0
9	CHANACK	34	SR1
10		35	SR2
11	DEVNODB	36	
12	SIOENABLE	37	SR3
13	EOT	38	SR4
14	JMPMET	39	SR5
15		40	SR6
16	TOGGLEINXFER	41	SR7
17	TOGGLESR	42	
18	TOGGLEOUTXFER	43	PCMD1
19	TOGGLESIOOK	44	SETJMP
20		45	PSTATSTB
21	XFERERROR	46	PCONTSTB
22	REQ	47	READNEXTWD
23		48	PWRITESTB
24	SR8	49	SETINT
25	SR9	50	PREADSTB

NOTE: Multiplexer channel connector P2.

Table 1-15. Port Controller Bus

PIN	SIGNAL	PIN	SIGNAL
1	$\overline{\text{ERR1}}$	26	PCD0
2	LSEL1	27	PCD1
3		28	
4	WPB	29	PCD2
5	STRB1	30	PCD3
6	$\overline{\text{CWREQ1}}$	31	
7		32	PCD4
8	$\overline{\text{RRREQ1}}$	33	PCD5
9	T01-1	34	
10		35	PCD6
11	T01-2	36	PCD7
12	$\overline{\text{ERR2}}$	37	
13		38	PCD8
14	LSEL2	39	PCD9
15	HSEL2	40	
16		41	PCD10
17	$\overline{\text{STRB2}}$	42	PCD11
18	$\overline{\text{CWREQ2}}$	43	
19		44	PCD12
20	RREQ2	45	PCD13
21	PB14	46	
22		47	PCD14
23	PB15	48	PCD15
24	Not used	49	
25		50	PCDPRTY

NOTE: Port controller connector P3

Table 1-16. Selector Channel Bus

PIN	SIGNAL	PIN	SIGNAL
1	$\overline{\text{CHANSO}}$	26	SR13
2		27	SR12
3	SRCLOCK	28	SR11
4		29	SR10
5	$\overline{\text{DEVEND}}$	30	
6		31	SR9
7	$\overline{\text{ACKSR}}$	32	SR8
8		33	SR7
9	$\overline{\text{CHANACK}}$	34	SR6
10		35	SR5
11	$\overline{\text{DEVNODB}}$	36	
12	$\overline{\text{SIOENABLE}}$	37	SR4
13	$\overline{\text{EOT}}$	38	SR3
14	$\overline{\text{JMPMET}}$	39	SR2
15		40	SR1
16	TOGGLEINXFER	41	SR0
17	CHANSR	42	
18	TOGGLEOUTXFER	43	$\overline{\text{PCMD1}}$
19	TOGGLESIOOK	44	$\overline{\text{SETJMP}}$
20		45	$\overline{\text{PSTATSTB}}$
21	$\overline{\text{XFERERROR}}$	46	$\overline{\text{PCONTSTB}}$
22	$\overline{\text{REQ}}$	47	$\overline{\text{READNEXTWD}}$
23		48	$\overline{\text{PWRITESTB}}$
24	SR15	49	$\overline{\text{SETINT}}$
25	SR14	50	$\overline{\text{PREADSTB}}$

NOTE: Selector channel connector P2

Table 1-17. Selector Channel Connector J1

PIN	SIGNAL	PIN	SIGNAL
1	FREEZE	26	LDBANK
2	RESET	27	
3		28	RRREQ
4	WPB	29	WBA1
5	WBB2	30	
6		31	WAIT
7	WBA2	32	XERR
8	SENSEACK	33	
9		34	WBB1
10	CW1	35	CWREQ
11	TRB1FF	36	
12		37	IOPCNTDATA
13	JUMPFF	38	DATAINACK
14	CHACTIVE	39	
15		40	RRDATA
16	TRB2FF	41	PCRST
17	AWBWAIT	42	
18		43	IOPCNTWAIT
19	CWBWAIT	44	PFSENB
20	WT	45	
21		46	INCWC
22	DATAOUT	47	ADR
23	IOCWWAIT	48	
24		49	DATAOUTACK
25	IOAWWAIT	50	GOACTIVE

Table 1-18. Selector Channel Connector J2

PIN	SIGNAL	PIN	SIGNAL
1	FSENB	26	RBB2
2	TRBENB	27	
3		28	RBB1
4	LA	29	ENDB
5	IOPCNTDN	30	
6		31	DEVNOADR
7	DPE	32	IOAWADR
8	DATA	33	
9		34	RBA2
10	WCTC	35	CW2
11	IOCW4	36	
12		37	RPB
13	IOCW0	38	HSEL
14	IOCW1	39	
15		40	LDRR
16	IOCW2	41	STRB
17	IOCW3	42	
18		43	LSEL
19	WFRTC	44	WCR0
20	INTCLRIL	45	
21		46	PCERR
22	RBA1	47	ILLADR
23	LDDEVN0	48	
24		49	RESREQ
25	IOPCNTADR	50	KEND

Table 1-19. Memory Connector J1

PIN	SIGNAL	PIN	SIGNAL
1		26	DATA6
2	Not used	27	
3		28	DATA7
4	Not used	29	
5		30	DATA8
6	Not used	31	
7		32	DATA9
8	Not used	33	
9		34	DATA10
10	Not used	35	
11		36	$\overline{\text{WRITE}}$
12	Not used	37	
13		38	$\overline{\text{READ}}$
14	DATA0	39	
15		40	$\overline{\text{RFSH}}$
16	DATA1	41	
17		42	$\overline{\text{RAS}}$
18	DATA2	43	
19		44	ROW2
20	DATA3	45	
21		46	ROW1
22	DATA4	47	
23		48	ROW0
24	DATA5	49	
25		50	$\overline{\text{CAS}}$

Table 1-20. Memory Connector J3

PIN	SIGNAL	PIN	SIGNAL
1		26	BD0
2	Not used	27	
3		28	DATA11
4	Not used	29	
5		30	DATA12
6	MA0	31	
7		32	DATA13
8	MA1	33	
9		34	DATA14
10	MA2	35	
11		36	DATA15
12	MA3	37	
13		38	C0
14	MA4	39	
15		40	C1
16	MA5	41	
17		42	C2
18	MA6	43	
19		44	C3
20	Not used	45	
21		46	C4
22	$\overline{\text{DISWEC}}$	47	
23		48	C5
24	BD1	49	
25		50	Not used

Table 1-21. Error Logging Interface Cable

PIN	SIGNAL	PIN	SIGNAL
1	$\overline{\text{DISWEC}}$	26	
2		27	ELAD7
3	Not used	28	
4		29	ELAD6
5	$\overline{\text{SELECT}}$	30	
6		31	ELAD5
7	L/$\overline{\text{U}}$ IMB	32	
8		33	ELAD4
9	$\overline{\text{PRESET}}$	34	
10		35	ELAD0
11	Not used	36	
12		37	ELAD1
13	$\overline{\text{ELDS}}$	38	
14		39	ELAD2
15	$\overline{\text{ELAV}}$	40	
16		41	ELAD3
17	SELECTED	42	
18		43	$\overline{\text{DATA IN}}$
19	ELAW	44	
20		45	Not used
21	ELAD8	46	
22		47	Not used
23	ELAD9	48	
24		49	Not used
25	$\overline{\text{DATAOUT}}$	50	

Table 1-22. IOP Power Bus (Memory Card Cage)

PIN NUMBER 56-PIN	PIN NUMBER 20-PIN	SIGNAL	PIN NUMBER 56-PIN	PIN NUMBER 20-PIN	SIGNAL
1		+5V	30		
2		+5V	31		-5VB
3		+5V	32		-5VB
4		+5V	33		
5	2	$\overline{\text{PFWARN}}$	34		
6	1	ENTIMER	35		+5VB
7	4	Not used	36		+5VB
8	3	Not used	37		+12VB
9	6	PWRON	38		+12VB
10	5	PWRON	39		+12.7VB
11	8	IORESET	40		+12.7VB
12	7	$\overline{\text{IORESET}}$	41	12	Not used
13	10	$\overline{\text{MCUCLK}}$	42	11	Not used
14	9	$\overline{\text{MCUCLK}}$	43		Not used
15			44		Not used
16			45		Not used
17		Not used	46	13	Not used
18		Not used	47		Not used
19			48		Not used
20			49	16	SI
21			50	15	SI
22			51		$\overline{\text{MCUFRCOUT}}$
23		Not used	52		$\overline{\text{MCUFRCOUT}}$
24		Not used	53	18	SO
25		Not used	54	17	SO
26		Not used	55		$\overline{\text{MCUFRCIN}}$
27		Not used	56		$\overline{\text{MCUFRCIN}}$
28		Not used		20	Not used
29				19	Not used

Table 1-23. Mag Tape Interface Connector J2

PIN	SIGNAL	PIN	SIGNAL
1		26	Not used
2		27	ROM16
3	ROM4	28	ROM0
4	Not used	29	ROM17
5	ROM5	30	ROM1
6	Not used	31	ROM18
7	ROM6	32	ROM2
8	Not used	33	ROM19
9	ROM7	34	ROM3
10	Not used	35	Not used
11	ROM8	36	Not used
12	Not used	37	RAR0
13	ROM9	38	RAR1
14	Not used	39	RAR2
15	ROM10	40	RAR3
16	Not used	41	RAR4
17	ROM11	42	RAR5
18	Not used	43	RAR6
19	ROM12	44	RAR7
20	Not used	45	RAR8
21	ROM13	46	RAR9
22	Not used	47	RAR10
23	ROM14	48	RAR11
24	Not used	49	
25	ROM15	50	

Table 1-24. Mag Tape Interface Connector J3

PIN	SIGNAL	PIN	SIGNAL
1		26	FLG5
2	$\overline{\text{CLEAR}}$	27	FLG2
3	$\overline{\text{T0}}$	28	FLG3
4	$\overline{\text{T3}}$	29	FLG0
5	$\overline{\text{T2}}$	30	FLG1
6	ROR9	31	Not used
7	UDS	32	EXTSEL
8	INPUT STROBE	33	Not used
9	FLG10	34	Not used
10	LOS	35	Not used
11	FLG14	36	Not used
12	FLG12	37	Not used
13	FLG16	38	Not used
14	FLG15	39	$\overline{\text{T1}}$
15	ROR8	40	Not used
16	FLG17	41	Not used
17	ROR11	42	Not used
18	ROR7	43	Not used
19	WT1	44	Not used
20	ROR10	45	Not used
21	FLG13	46	Not used
22	FLG11	47	Not used
23	FLG6	48	Not used
24	FLG7	49	Not used
25	FLG4	50	

Table 1-25. Mag Tape Interface to Tape Unit

PIN	SIGNAL	PIN	SIGNAL
1	Not used	26	Not used
2	SING TRK ERR	27	Not used
3	SELECT CMD 0	28	Not used
4	SELECT CMD 1	29	ID BURST
5	SELECT CMD 2	30	WRCLK
6	SELECT CMD 3	31	MULT TRK ERR
7	END OF BLOCK	32	TAPE MARK
8	READ CLK	33	WRITE DATA 0
9	READ DATA PRTY	34	WRITE DATE 1
10	WRT DATA PRTY	35	WRITE DATA 6
11	WRITE RESET	36	WRITE DATA 7
12	STAT 800/1600	37	WRITE DATA 4
13	LOAD POINT	38	WRITE DATA 5
14	READY	39	WRITE DATA 2
15	FILE PROTECT	40	WRITE DATA 3
16	END OF TAPE	41	READ DATA 6
17	FORWARD	42	READ DATA 7
18	REVERSE	43	READ DATA 4
19	WRITE	44	READ DATA 5
20	OFF LINE	45	READ DATA 2
21	REWIND	46	READ DATA 3
22	WRRST	47	READ DATA 0
23	Not used	48	READ DATA 1
24	Not used	49	Not used
25	Not used	50	Not used

Table 1-26. 7920A/7925A Disc Interface to Device Controller

PIN	SIGNAL	PIN	SIGNAL
1	+5V	26	Not used
2	+5V	27	IBUS3
3	IFN0	28	CLEAR
4	IFN2	29	ENID
5	IFN1	30	Not used
6	IFN3	31	IFCLK
7	FLG3	32	Not used
8	IBUS4	33	
9	FLG0	34	
10	IBUS5	35	+5V
11	FLG6	36	+5V
12	IBUS6	37	IBUS8
13	IFNVALID	38	IBUS12
14	IBUS7	39	IBUS9
15		40	IBUS13
16		41	IBUS10
17	Not used	42	IBUS14
18	POWERFAIL	43	IBUS11
19		44	IBUS15
20		45	Not used
21	IBUS0	46	FLG7
22	+5V	47	FLG1
23	IBUS1	48	FLG8
24	Not used	49	
25	IBUS2	50	

Table 1-27. 7920A/7925A Disc Controller Connector J2

PIN	SIGNAL	PIN	SIGNAL
1		26	ROM0
2		27	ROM1
3	ROM19	28	Not used
4	ROM18	29	RAR2
5	ROM7	30	Not used
6	ROM6	31	RAR1
7	ROM5	32	Not used
8	ROM4	33	RAR0
9	ROM17	34	Not used
10	ROM16	35	ROM15
11	ROM8	36	Not used
12	ROM9	37	ROM14
13	ROM10	38	Not used
14	Not used	39	ROM13
15	ROM11	40	Not used
16	Not used	41	ROM12
17	RAR7	42	ROM23
18	Not used	43	ROM22
19	RAR6	44	Not used
20	Not used	45	ROM21
21	RAR5	46	Not used
22	RAR4	47	ROM20
23	RAR3	48	Not used
24	ROM2	49	
25	ROM3	50	

Table 1-28. 7920A/7925A Disc Controller Connector P2

PIN	SIGNAL	PIN	SIGNAL
1		26	EXTFLG5
2	$\overline{\text{CLEAR}}$	27	EXTFLG2 (EOW)
3	CYCLECLK	28	EXTFLG3
4	Not used	29	EXTFLG0
5	EXTFLG16	30	EXTFLG1
6	XADDR2	31	$\overline{\text{M12}}$
7	UBOUT	32	EXTSEL
8	INPUT	33	$\overline{\text{M13}}$
9	EXTFLG8	34	$\overline{\text{M11}}$
10	LBOUT	35	$\overline{\text{M14}}$
11	EXTFLG12	36	$\overline{\text{M10}}$
12	EXTFLG10	37	$\overline{\text{M15}}$
13	EXTFLG14	38	$\overline{\text{M9}}$
14	EXTFLG13	39	TESTCLK
15	XADDR3	40	$\overline{\text{M8}}$
16	EXTFLG15	41	$\overline{\text{M3}}$
17	XADDR0	42	$\overline{\text{M4}}$
18	XADDR4	43	$\overline{\text{M2}}$
19	CLKDISABLE	44	$\overline{\text{M5}}$
20	XADDR1	45	$\overline{\text{M1}}$
21	EXTFLG11	46	$\overline{\text{M6}}$
22	EXTFLG9		$\overline{\text{M0}}$
23	EXTFLG6	48	$\overline{\text{M7}}$
24	EXTFLG7	49	Not used
25	EXTFLG4	50	

Table 1-29. 7920A/7925A Disc Controller Connector P3

PIN	SIGNAL	PIN	SIGNAL
1		26	READ NRZ DATA
2	30MHZ	27	
3		28	Not used
4	+5V	29	
5		30	Not used
6	$\overline{\text{INHCRCCLK}}$	31	
7		32	DATACLK
8	Not used	33	
9		34	TESTCLR
10	WRITEDATATEST	35	
11		36	SYNC
12	$\overline{\text{WRITECLK}}$	37	
13		38	TEST OUTPUT
14	WRITETEST	39	
15		40	Not used
16	+5V	41	
17		42	Not used
18	+5V	43	
19		44	ECCSERIALDATA
20	Not used	45	
21		46	Not used
22	READTEST	47	
23		48	Not used
24	$\overline{\text{READCLK}}$	49	
25		50	CLOCKINHIBIT

Table 1-30. Disc Controller to 7920A/7925A Disc Drive

PIN	SIGNAL	PIN	SIGNAL
1	+5V	26	Not used
2	+5V	27	CBUS7
3	CBUS0	28	Not used
4	CBUS11	29	
5	CBUS1	30	Not used
6	CBUS10	31	
7	CBUS2	32	Not used
8	CBUS9	33	
9	CBUS3	34	
10	CBUS8	35	+5V
11		36	+5V
12		37	Not used
13	Not used	38	CBUS12
14		39	Not used
15		40	CBUS13
16		41	Not used
17	Not used	42	CBUS14
18	Not used	43	Not used
19		44	CBUS15
20		45	
21	CBUS4	46	
22	+5V	47	
23	CBUS5	48	
24	Not used	49	
25	CBUS6	50	

SECTION II - CPU AND MEMORY PCAS

CONTENTS

PCA NO.	NAME
30003-60003	ALU
30003-60004	R BUS
30003-60006	CIR
30003-60007	MCU
30003-60021	ROM
30003-60022	SSF
30003-60025	S BUS
30003-60028	IOP
30007-60005	MCL
30008-60003	SMA
30009-60002	FLI
30012-60001	EIS

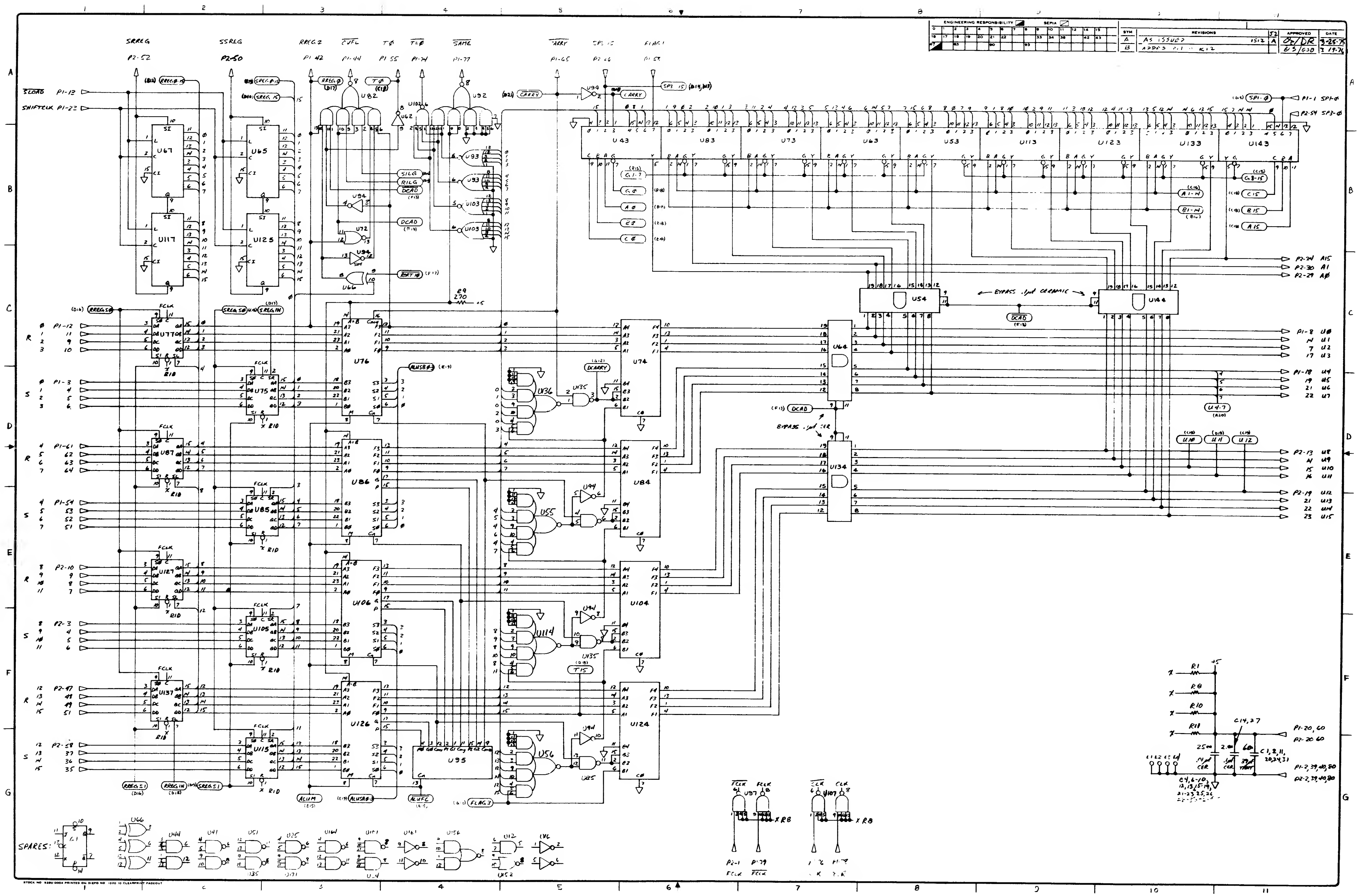

ALU PCA, 30003-60003, Sheet 1 of 3

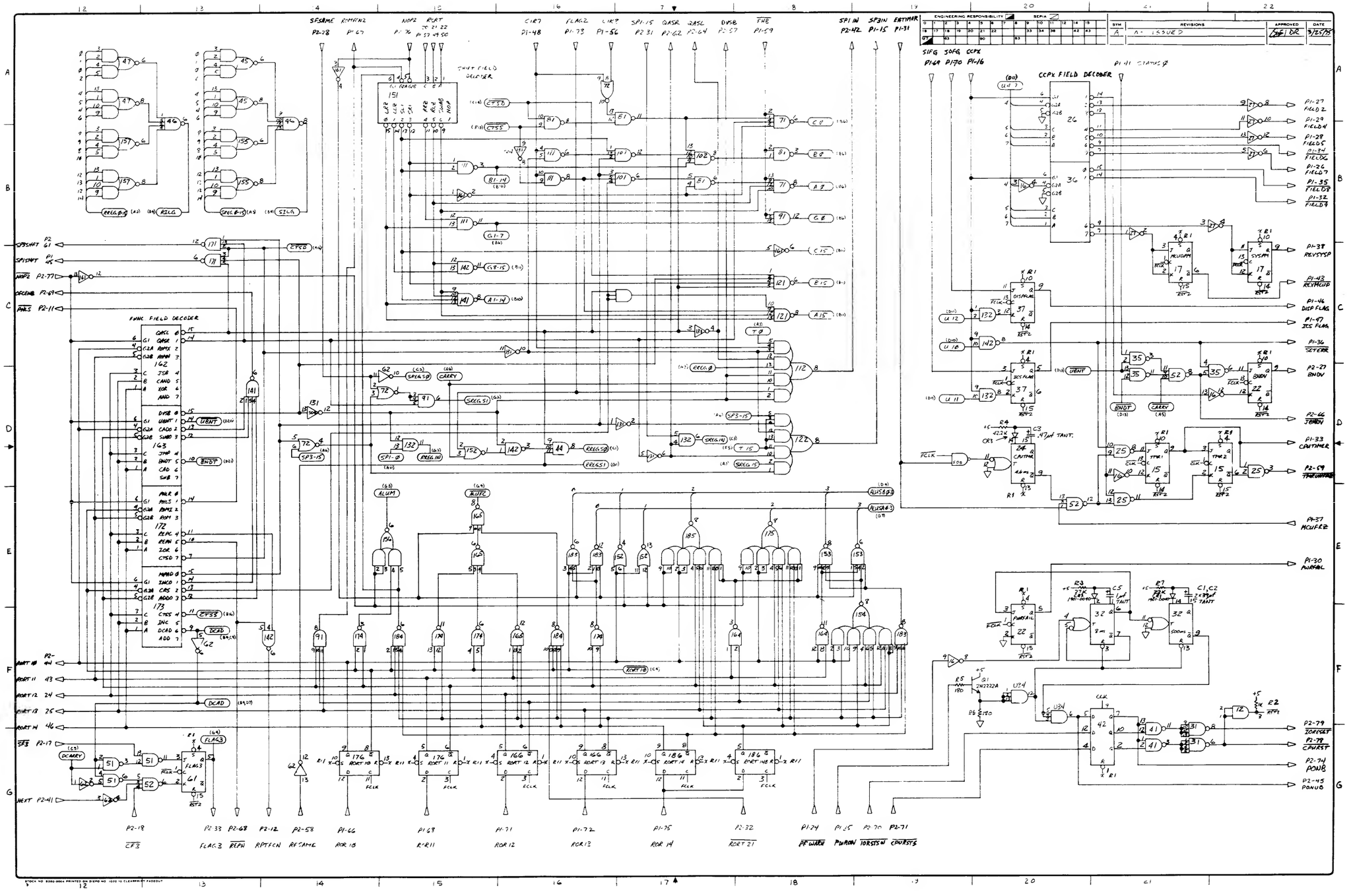

ALU PCA, 30003-60003, Sheet 2 of 3

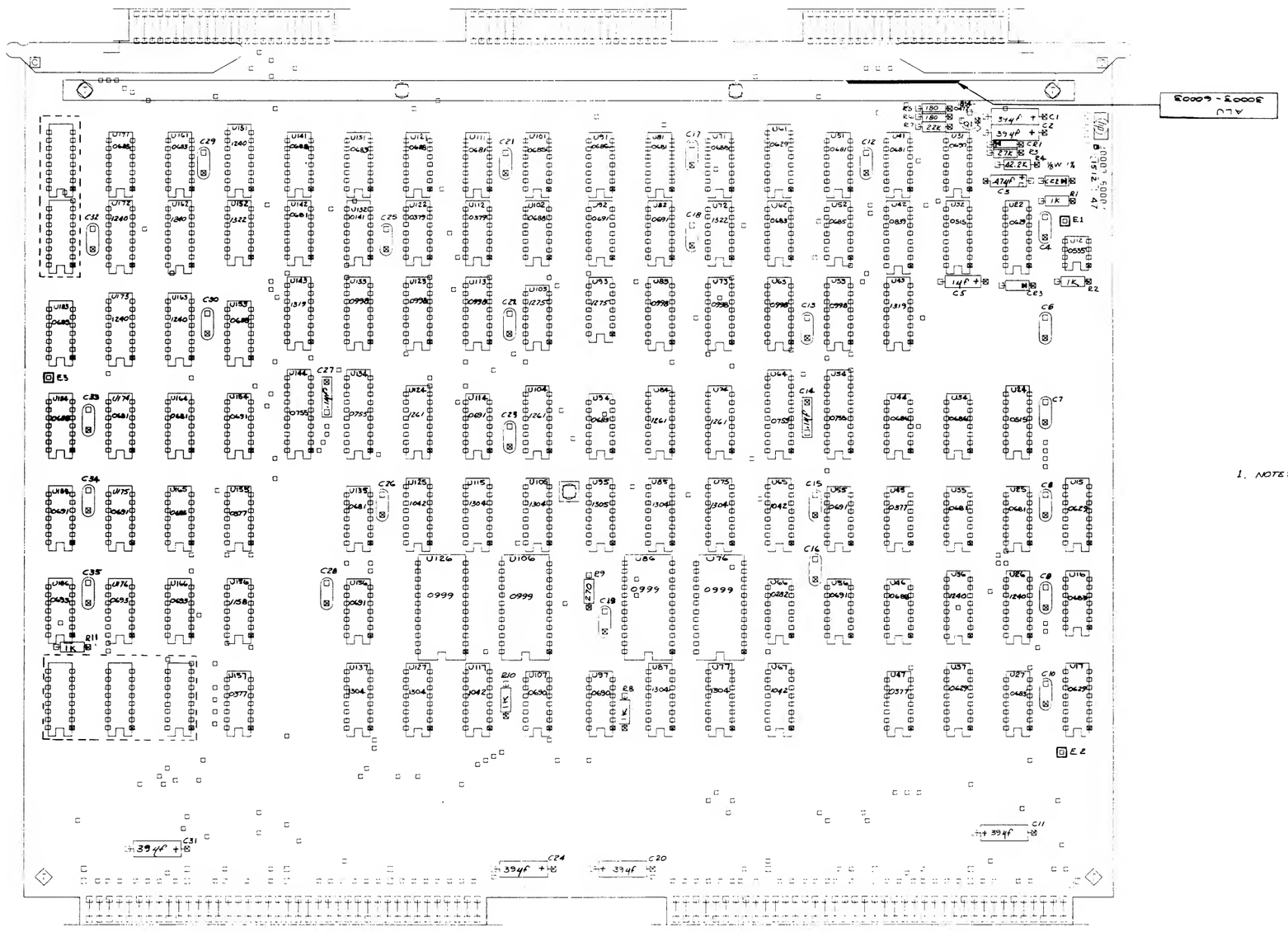

1. NOTE: UNLESS OTHERWISE SPECIFIED
ALL RESISTANCE IN OHMS ± 5%, 1/4W
ALL CAPACITANCE IN MICRO FARADS
ALL .01 CAPACITORS ARE CERAMIC DISC
ALL DIODES ARE 1901-0040
ALL ICS ARE 1820-

ALU PCA, 30003-60003, Sheet 3 of 3

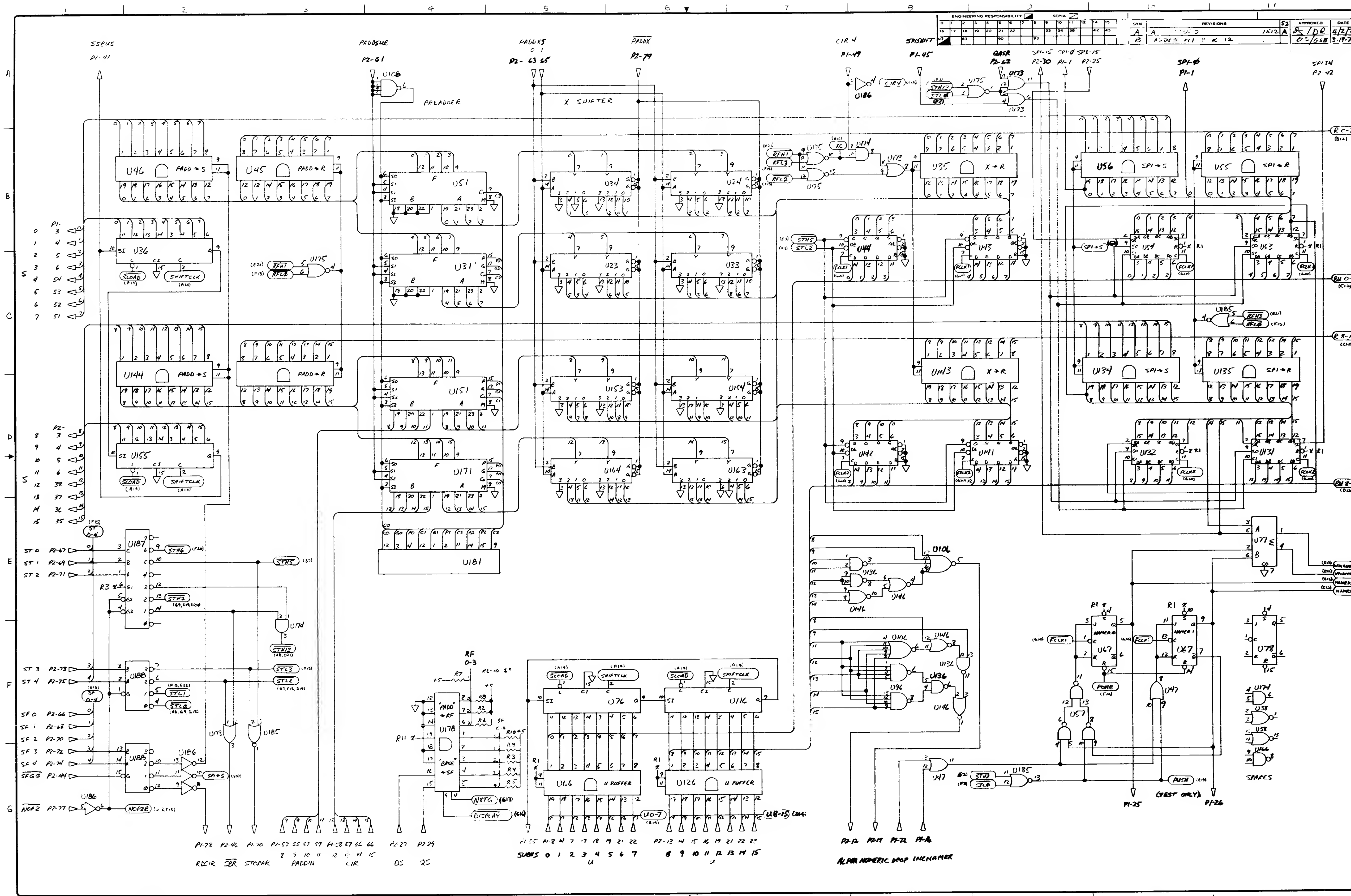

R Bus PCA, 30003-60004, Sheet 1 of 3

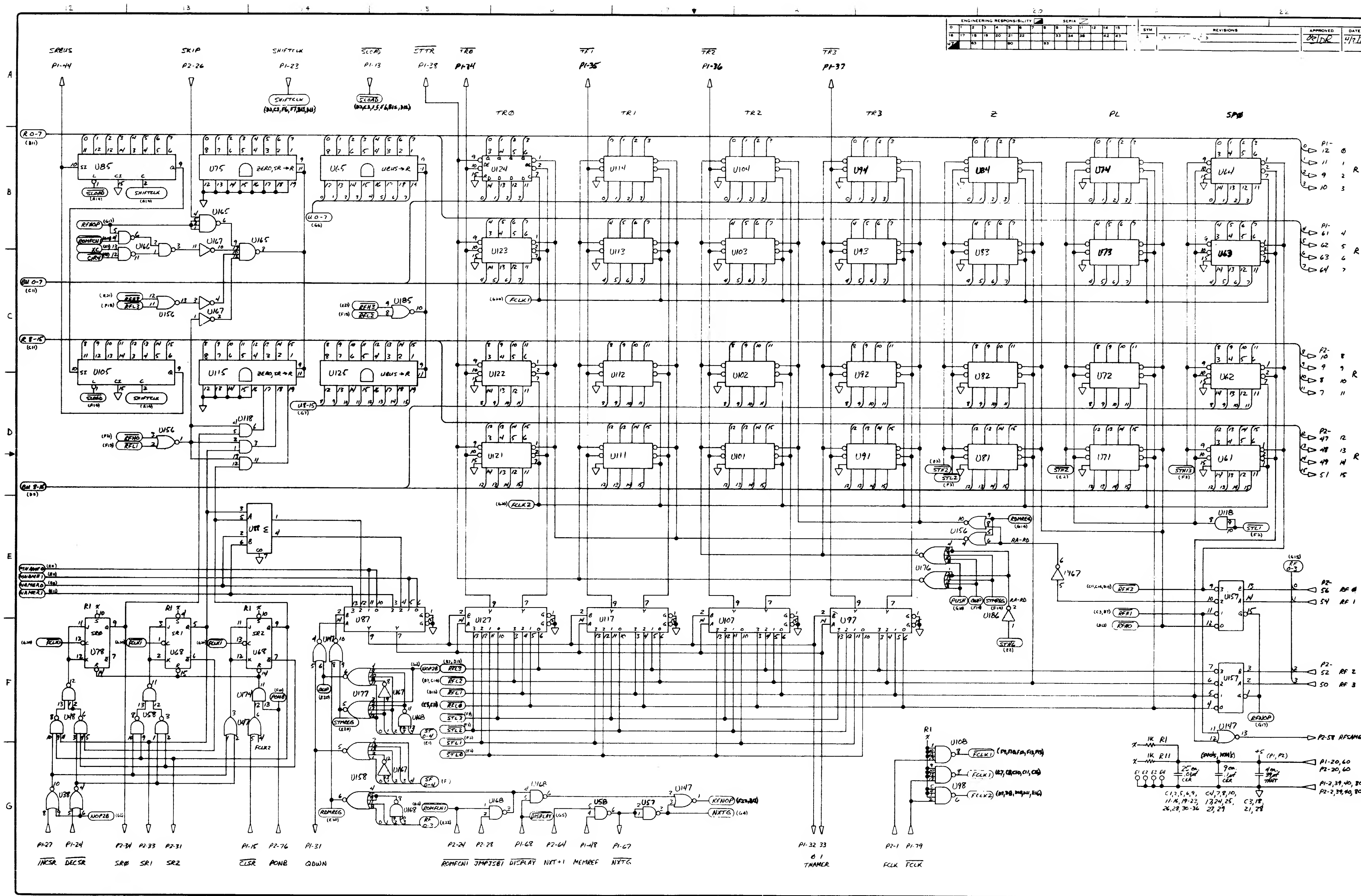

R Bus PCA, 30003-60004, Sheet 2 of 3

NOTES: UNLESS OTHERWISE SPECIFIED.

1. ALL RESISTORS IN OHMS.
   ALL RESISTORS 1/4W, 5%.
   ALL CAPACITANCE IN MICROFARADS.
   ALL CAPACITORS .01μF CERAMIC DISC.
   ALL IC'S ARE 1820-____.

R Bus PCA, 30003-60004, Sheet 3 of 3

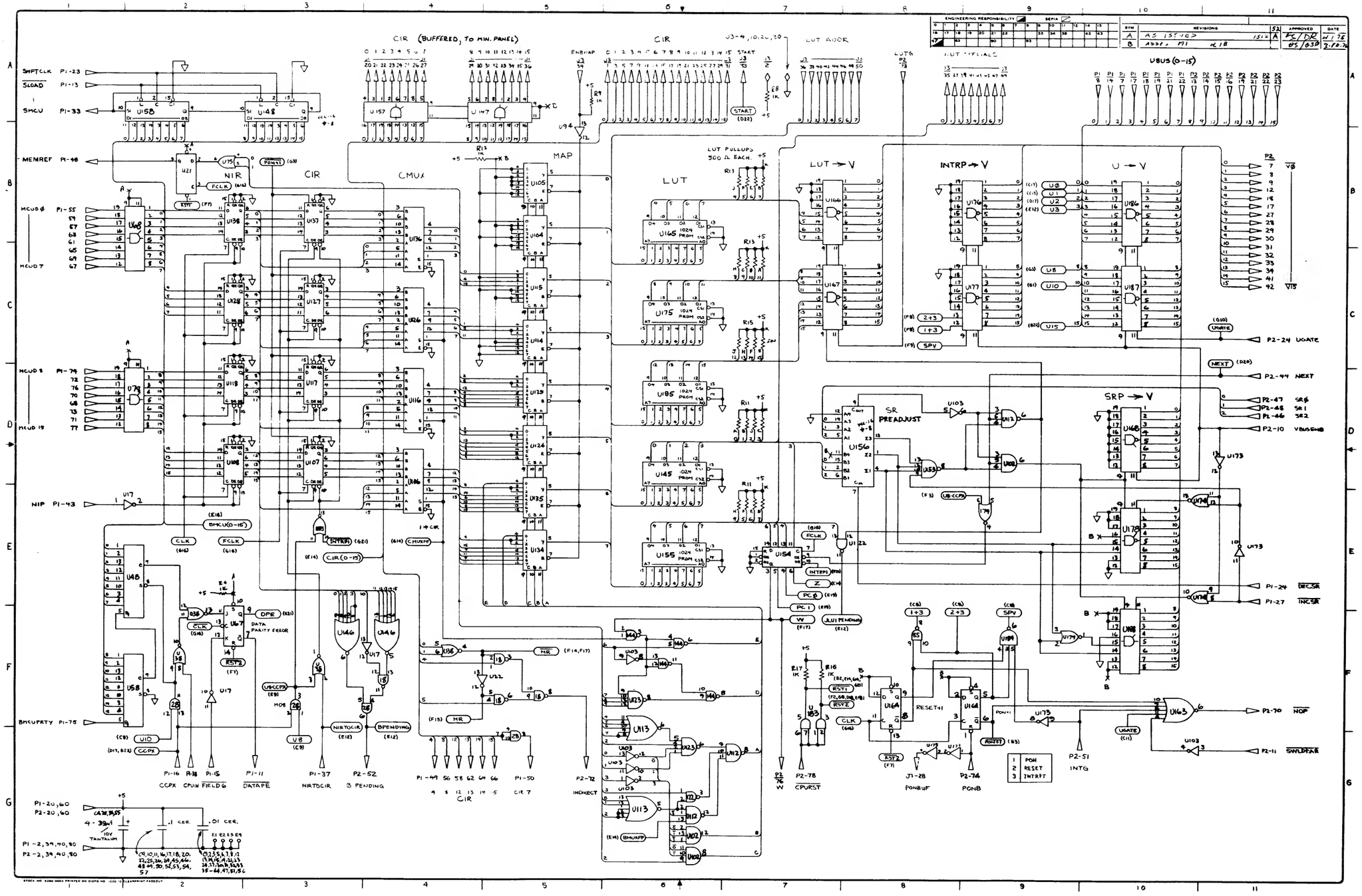

CIR PCA, 30003-60006, Sheet 1 of 3

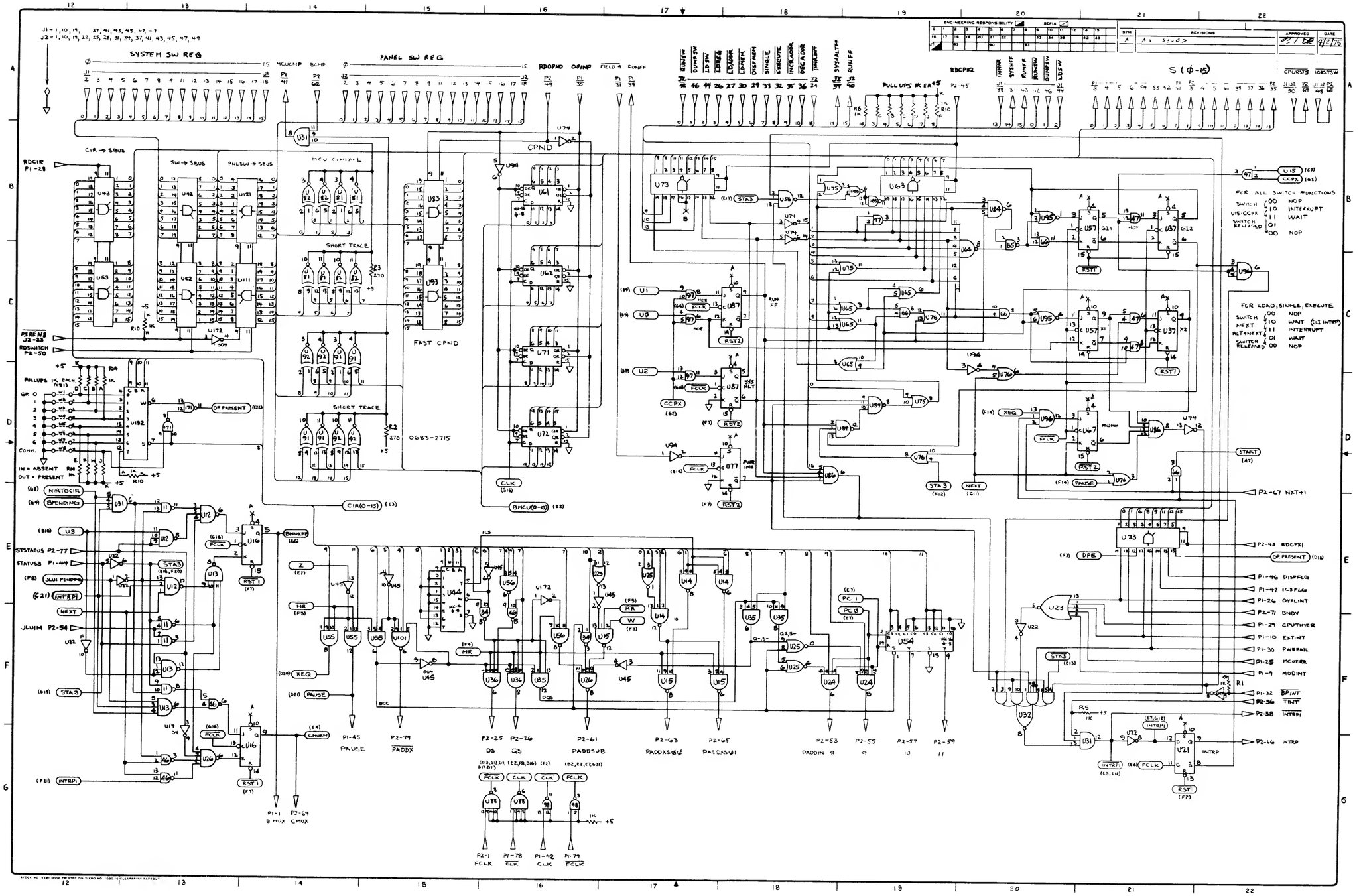

CIR PCA, 30003-60006, Sheet 2 of 3

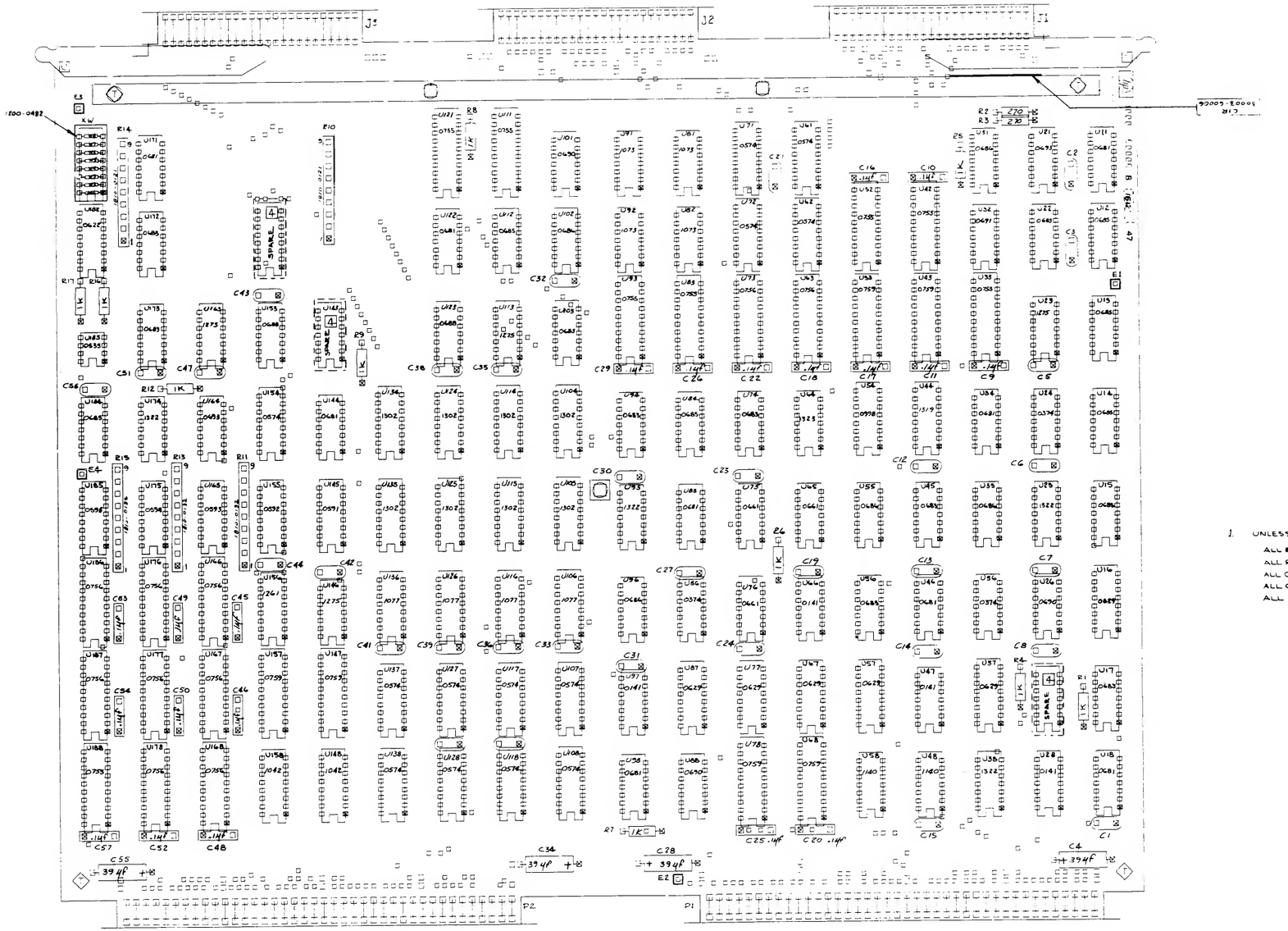

1. UNLESS OTHERWISE NOTED:
   ALL RESISTANCE IN OHMS
   ALL RESISTORS ±5% .25W
   ALL CAPACITANCE IN MICRO FARADS
   ALL CAPACITORS .01μF CER. DISC.
   ALL IC'S ARE 1820-

CIR PCA, 30003-60006, Sheet 3 of 3

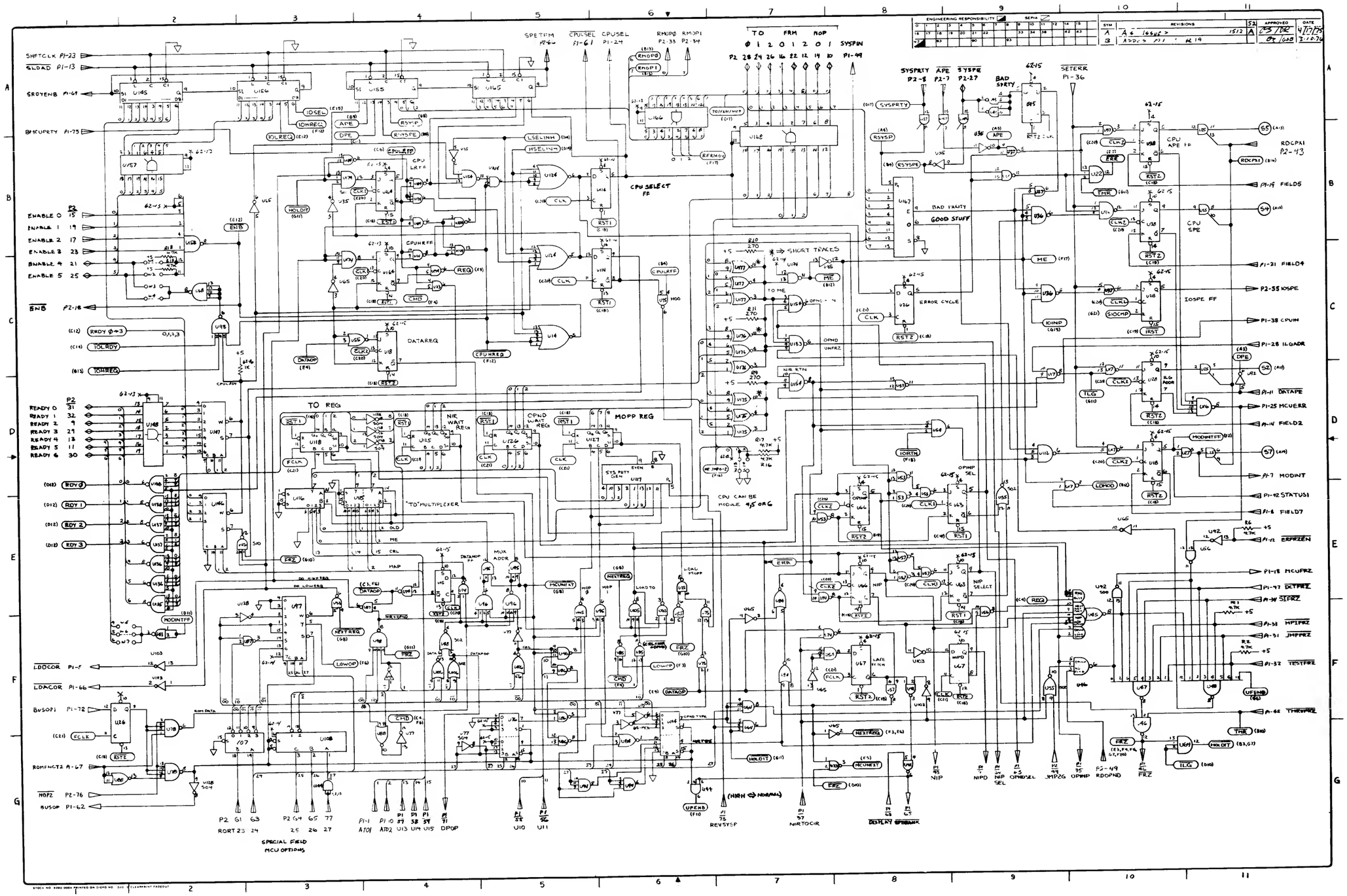

MCU PCA, 30003-60007, Sheet 1 of 3

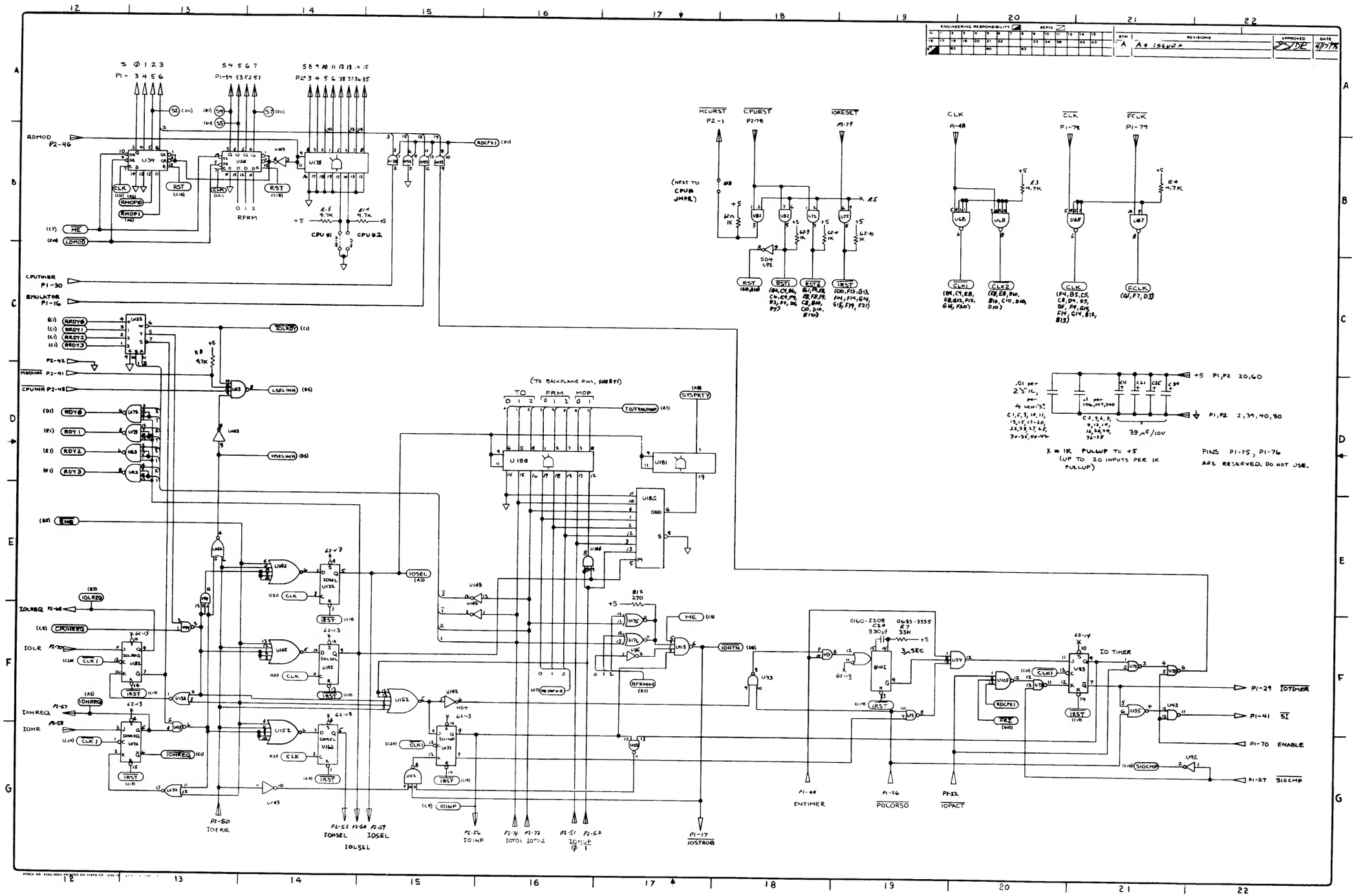

MCU PCA, 30003-60007, Sheet 2 of 3

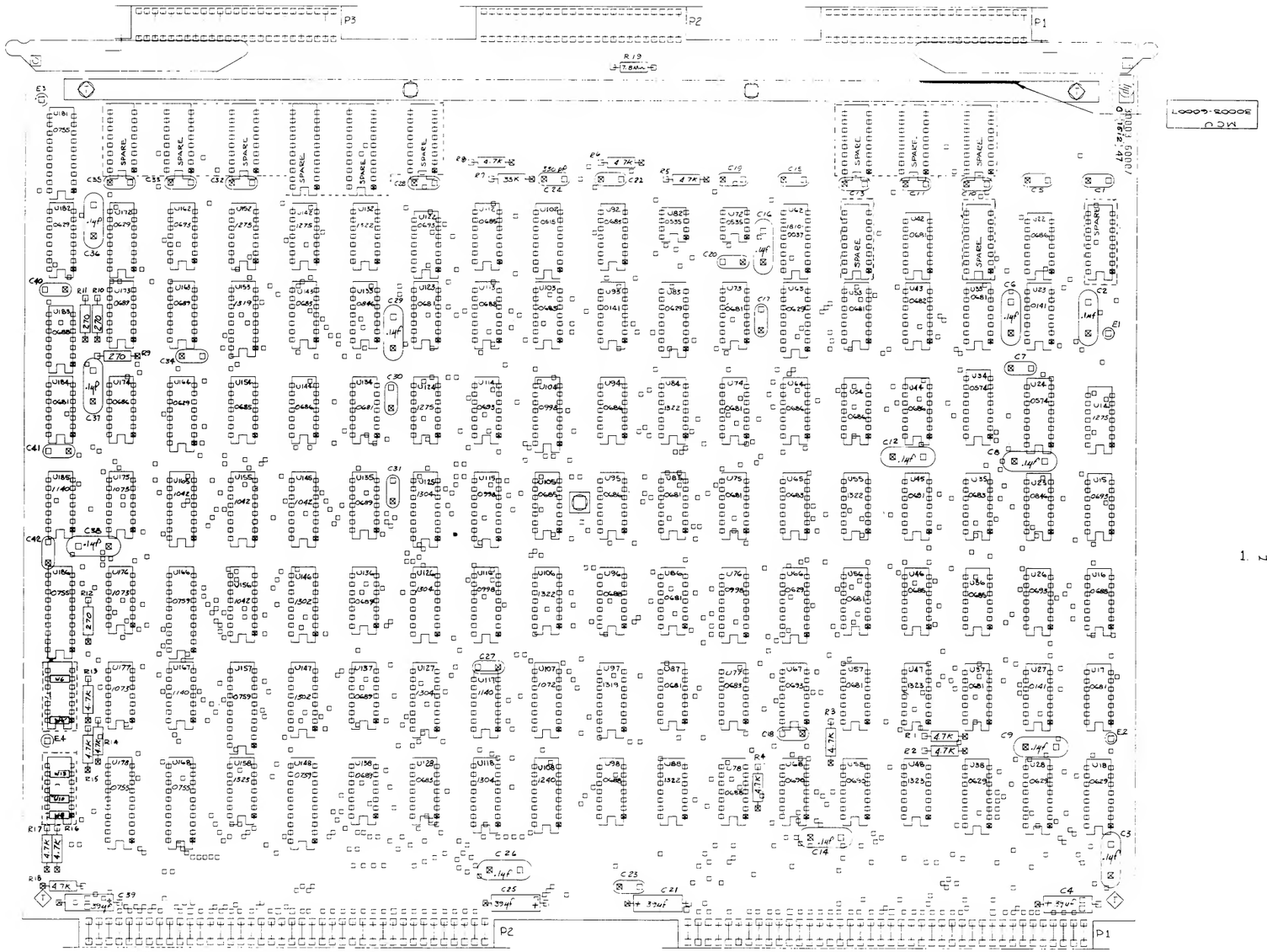

1. NOTE:
   UNLESS OTHERWISE SPECIFIED.
   ALL RESISTANCE IN OHMS
   ALL RESISTORS ARE 1/4 W 5%
   ALL CAPACITANCE IN MICRO FARADS
   ALL CAPACITORS ARE .01. 0160-2055
   IC'S ARE 1820-

MCU PCA, 30003-60007, Sheet 3 of 3

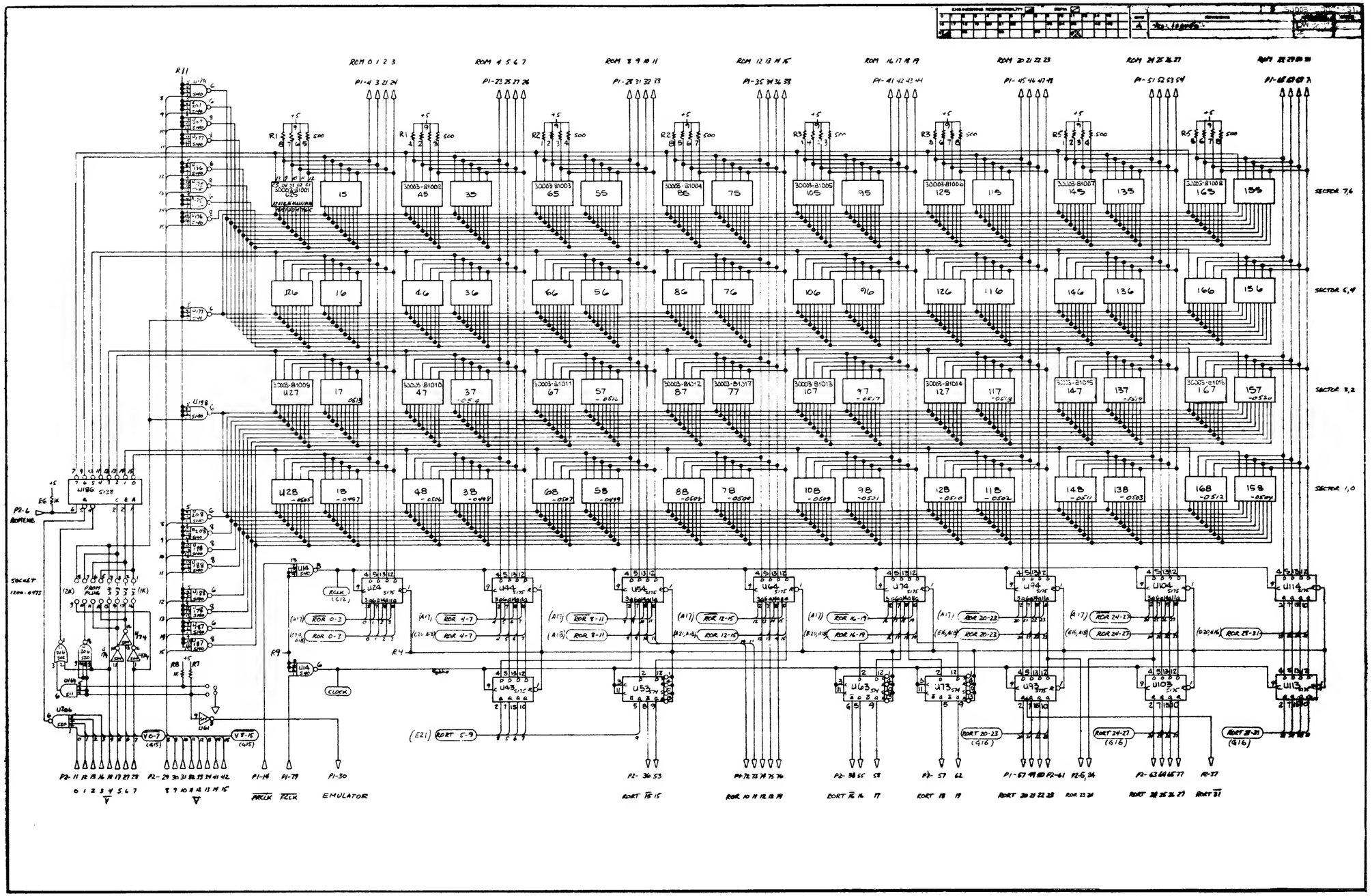

ROM PCA, 30003-60021, Sheet 1 of 3

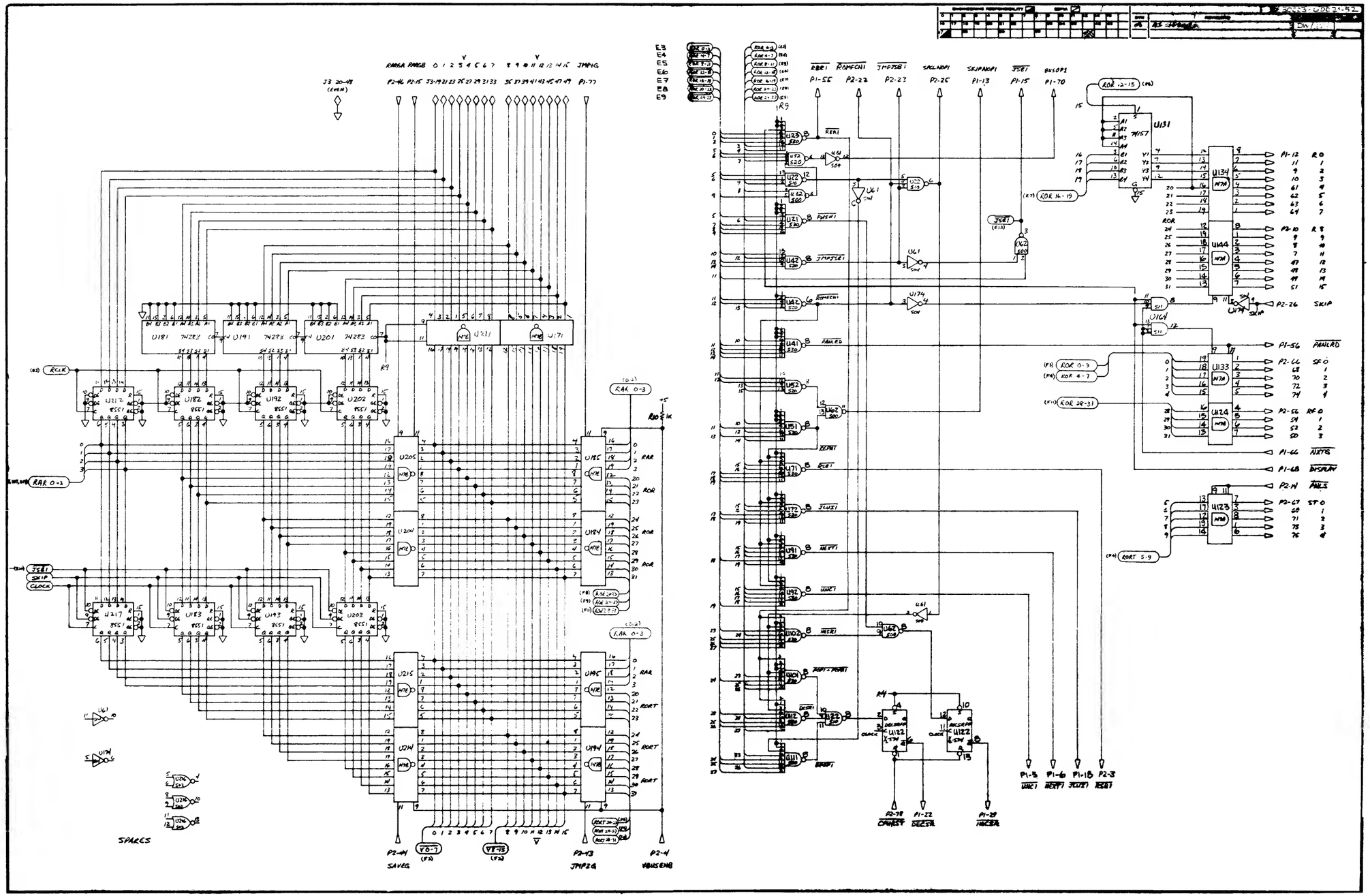

ROM PCA, 30003-60021, Sheet 2 of 3

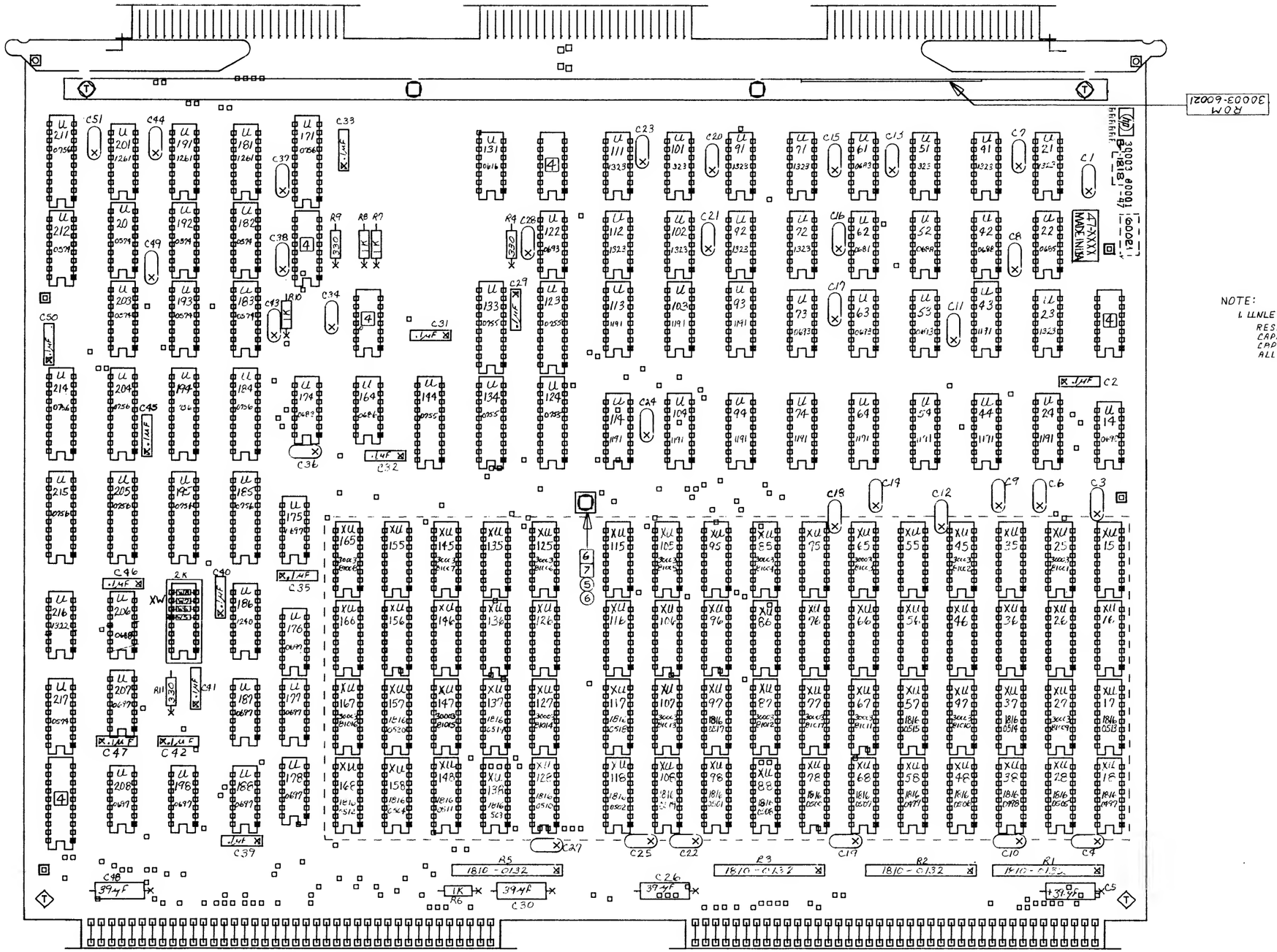

NOTE:

1. UNLESS OTHERWISE SPECIFIED
   RESISTANCE IN OHMS ± 5% .25W
   CAPACITANCE VALUES IN MICRO FARADS
   CAPACITORS ARE .01 CERAMIC DISC.
   ALL I C'S ARE 1820-

ROM PCA, 30003-60021, Sheet 3 of 3

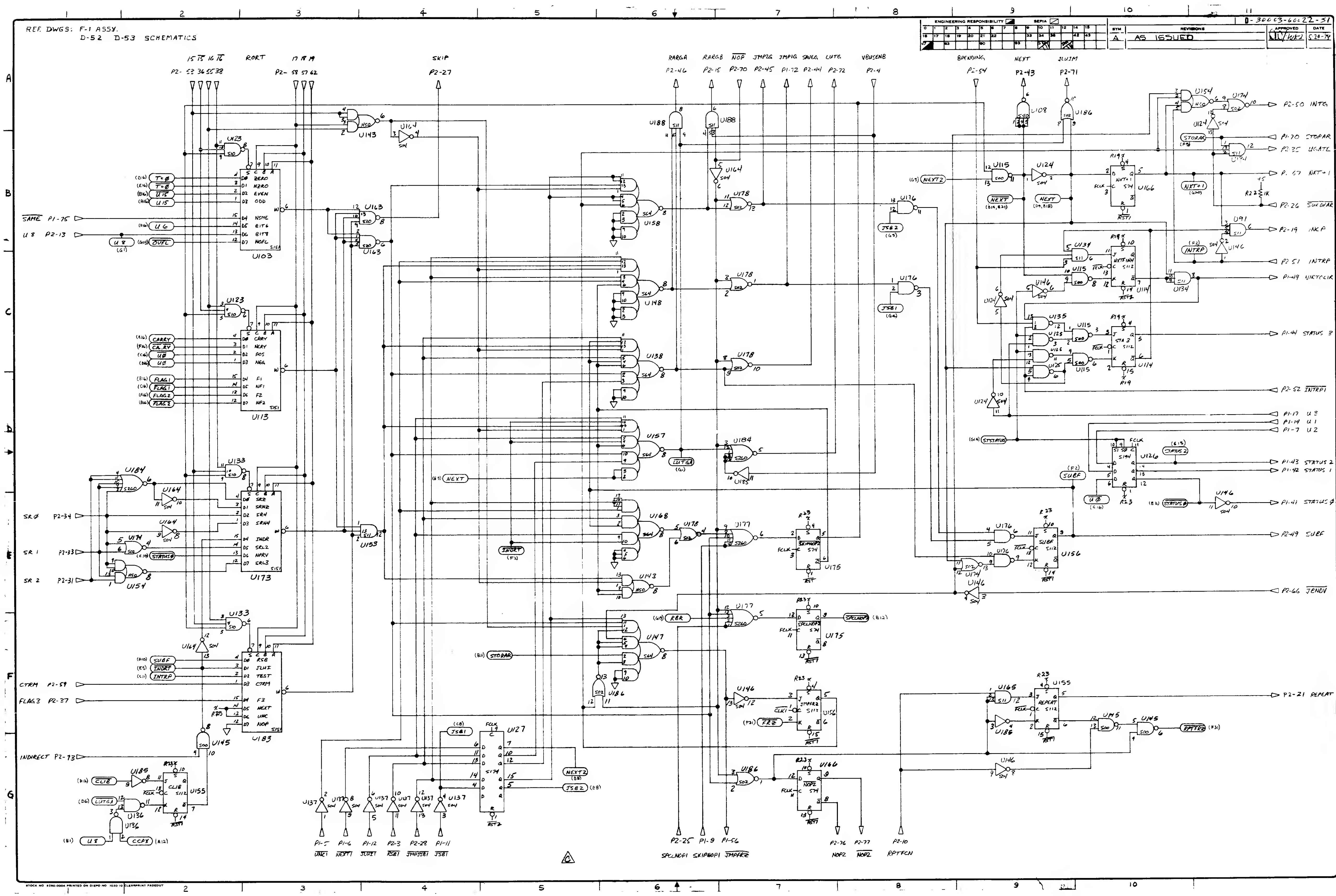

SSF PCA, 30003-60022, Sheet 1 of 4

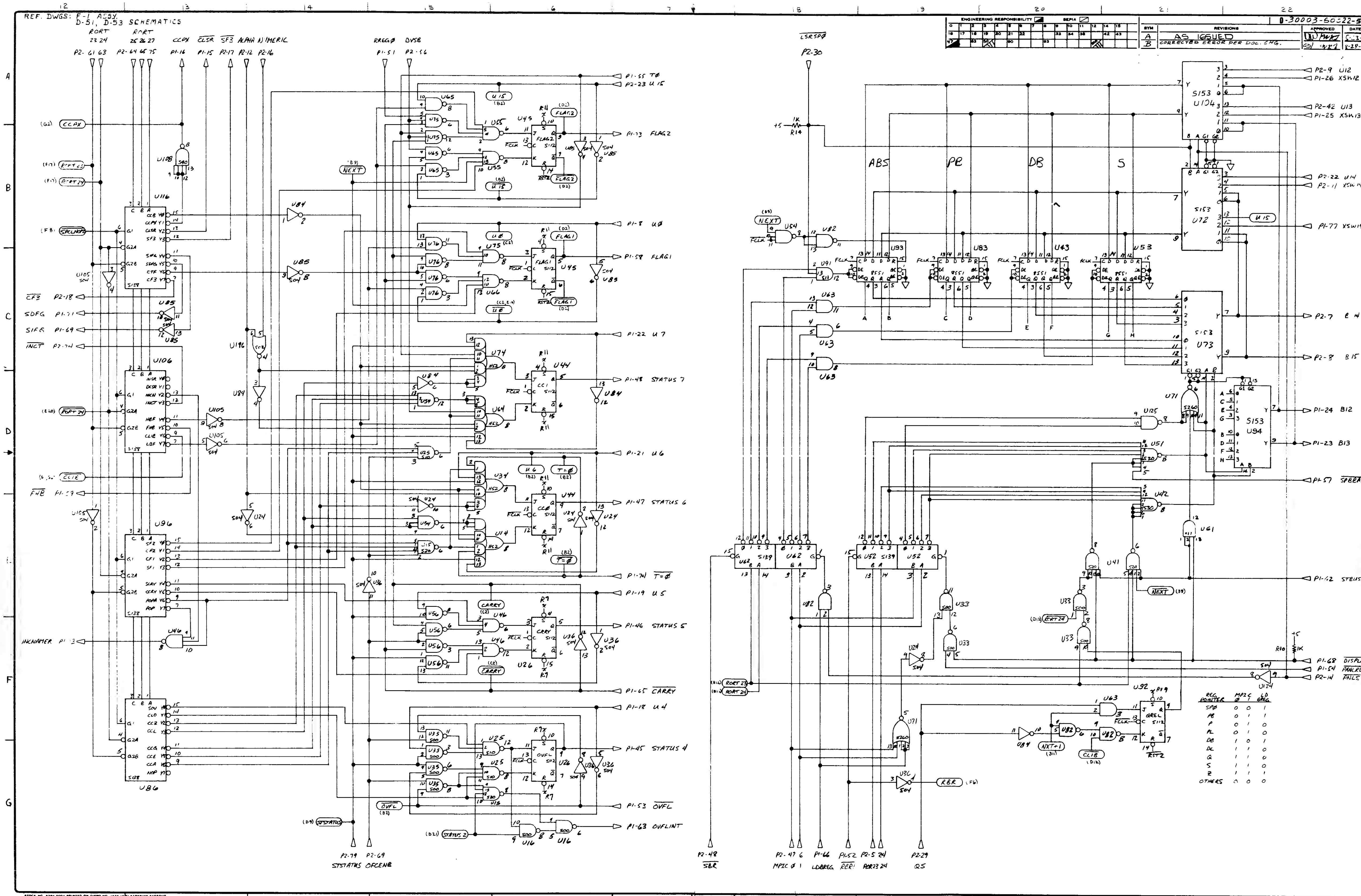

SSF PCA, 30003-60022, Sheet 2 of 4

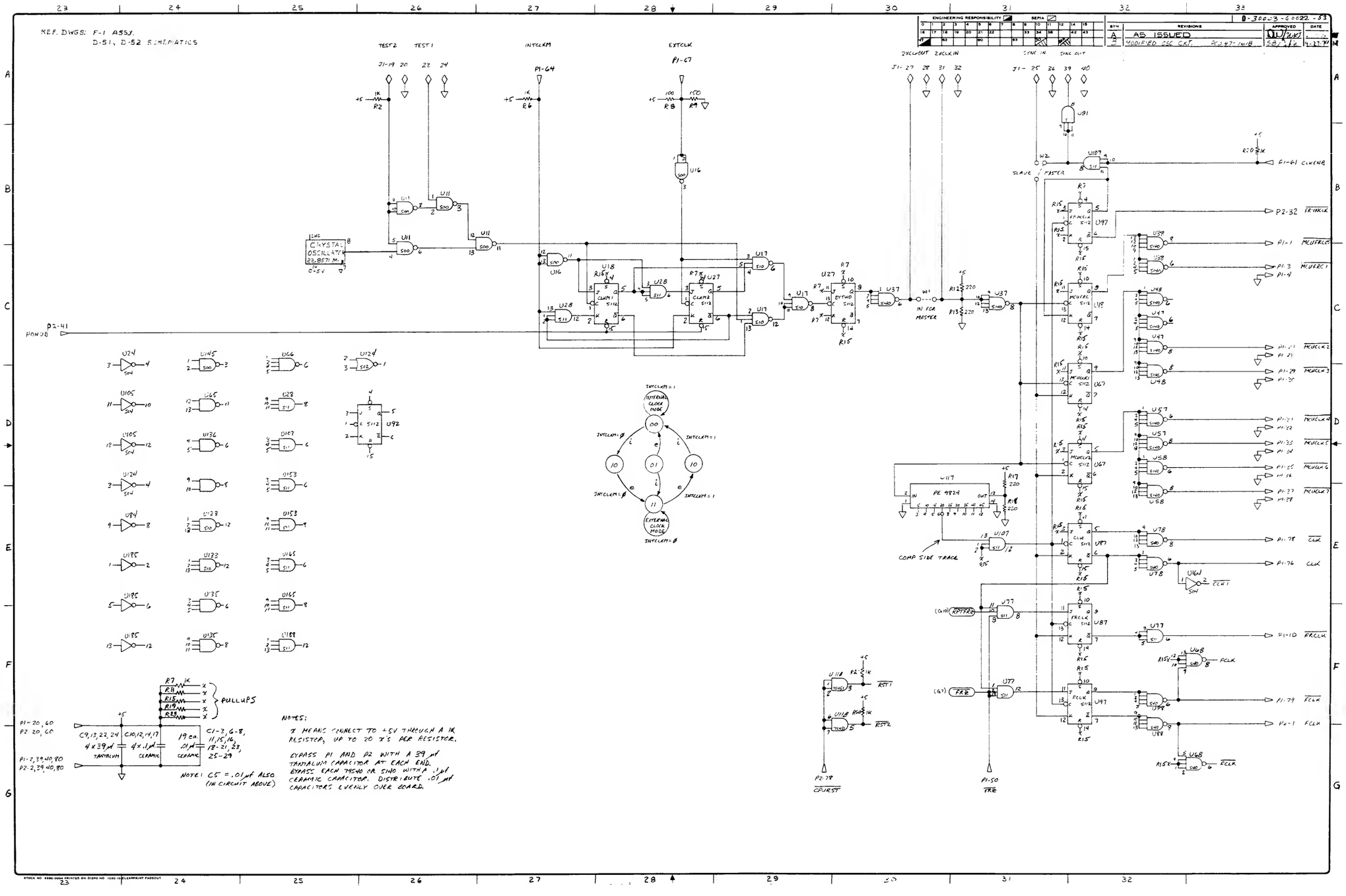

SSF PCA, 30003-60022, Sheet 3 of 4

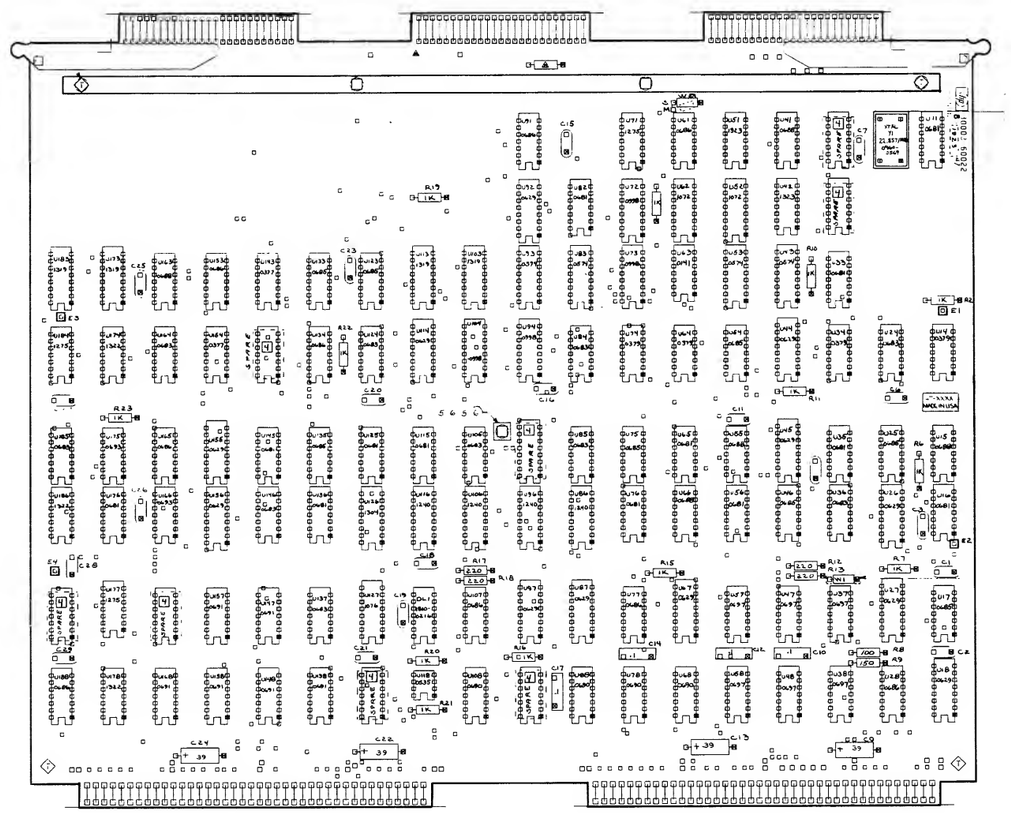

NOTES:
1. UNLESS OTHERWISE SPECIFIED
RESISTANCE VALUES ARE IN OHMS ±5% (1/4W)
CAPACITANCE VALUES ARE IN MICROFARADS
ALL CAPACITORS ARE DICERAMIC DISC
ALL IC'S ARE 1820-----

SSF PCA, 30003-60022, Sheet 4 of 4

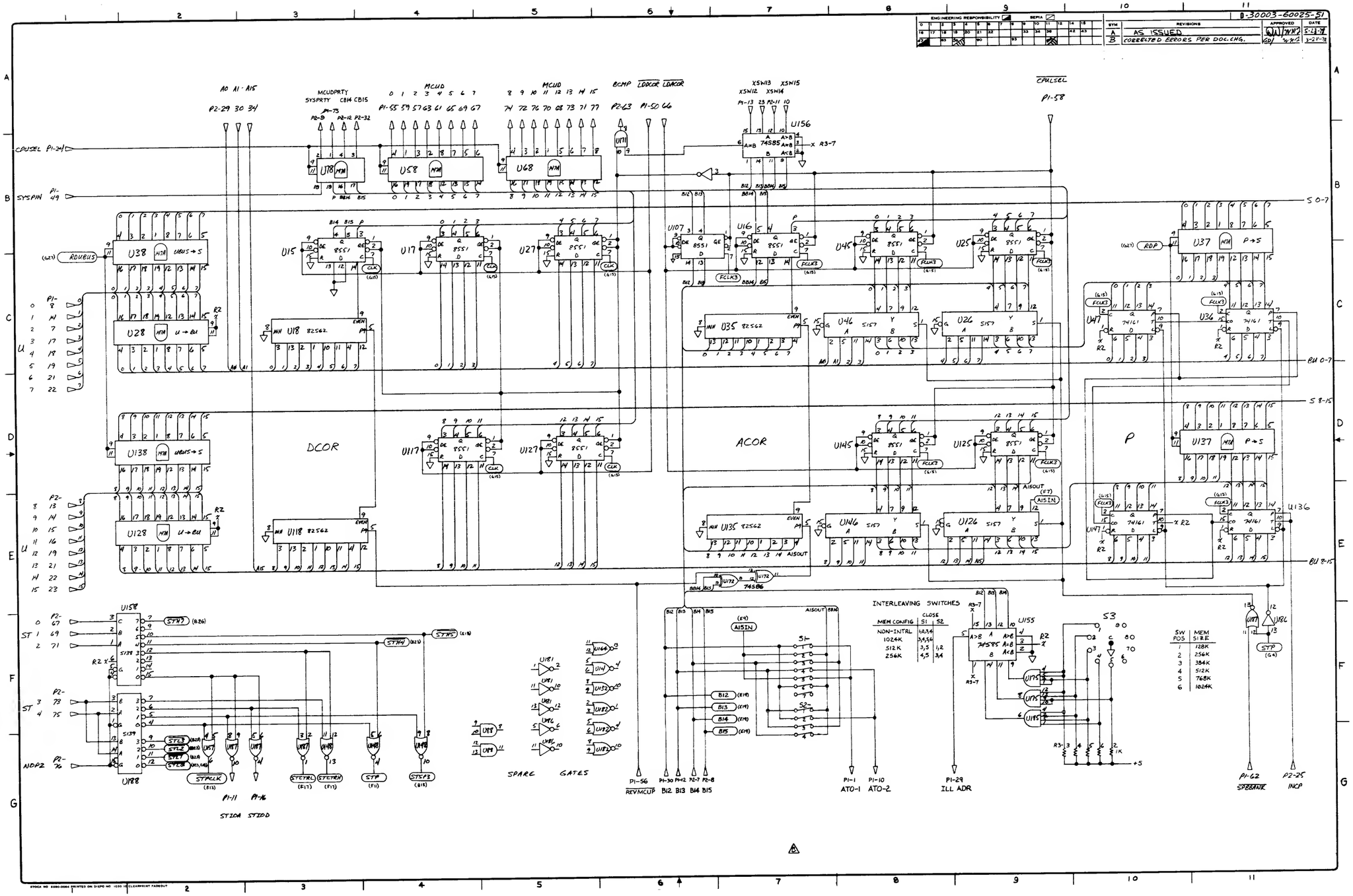
D-30003-60025-51
REVISIONS
A AS ISSUED
B CORRECTED ERRORS PER DOC.CHG.
DCOR
ACOR
P
SPARE GATES
INTERLEAVING SWITCHES
MEM CONFIG | CLOSE S1 | S2
NON-INTRL | 1,2,3,4
1024K | 3,4,5,6
512K | 3,5 | 1,2
256K | 3,4
SW POS | MEM SIZE
1 | 128K
2 | 256K
3 | 384K
4 | 512K
5 | 768K
6 | 1024K
S Bus PCA, 30003-60025, Sheet 1 of 4

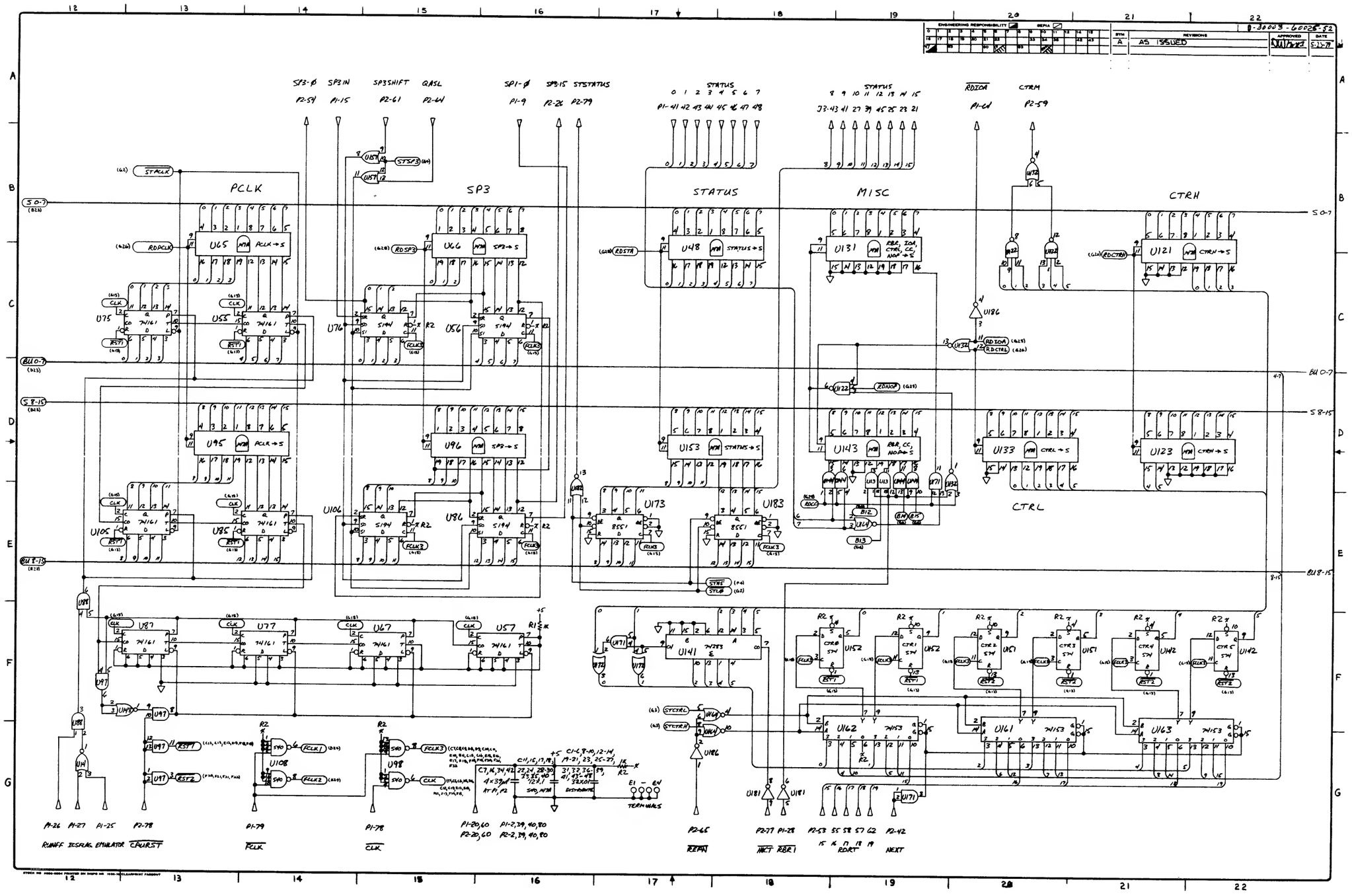

S Bus PCA, 30003-60025, Sheet 2 of 4

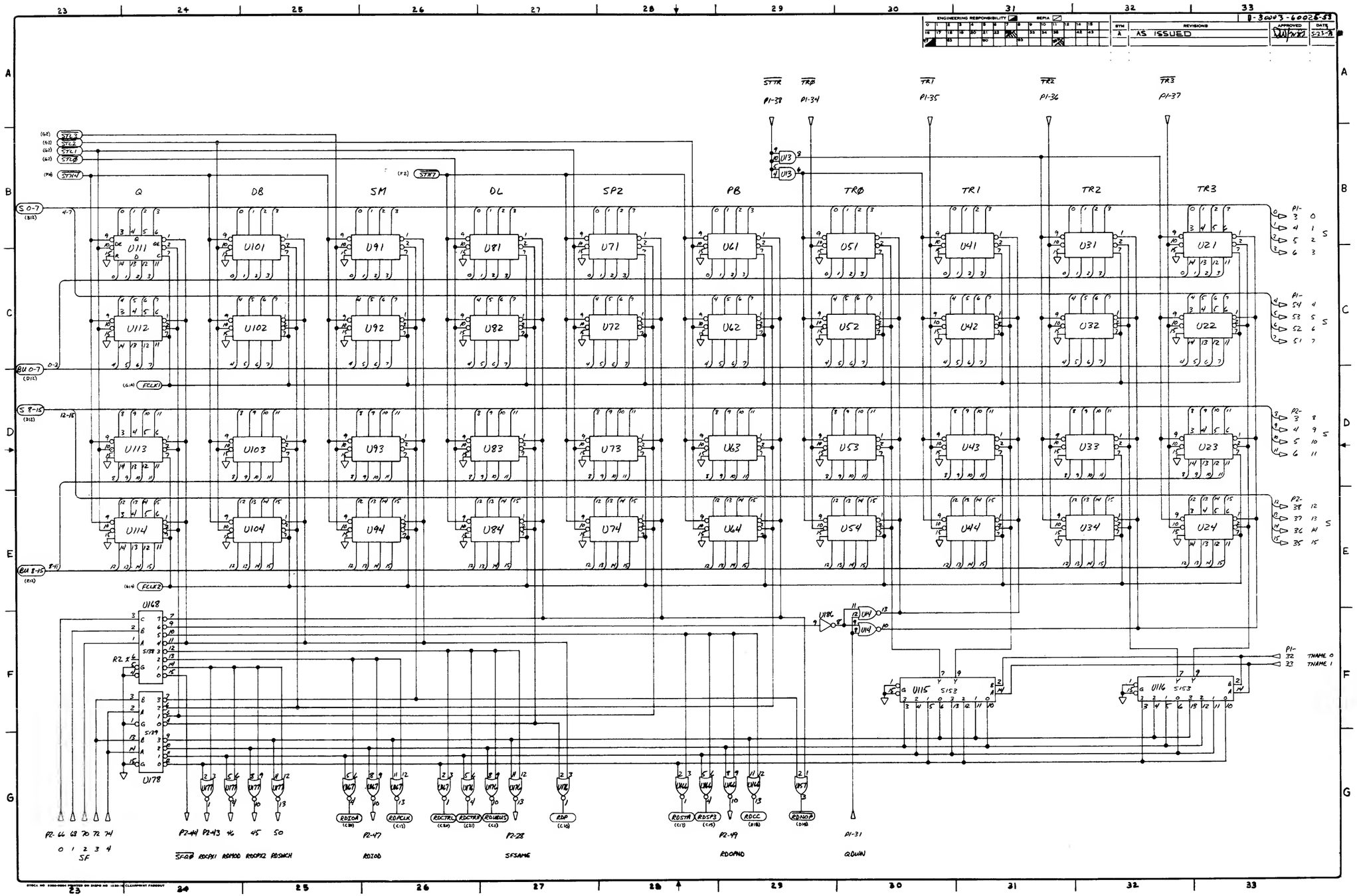

S Bus PCA, 30003-60025, Sheet 3 of 4

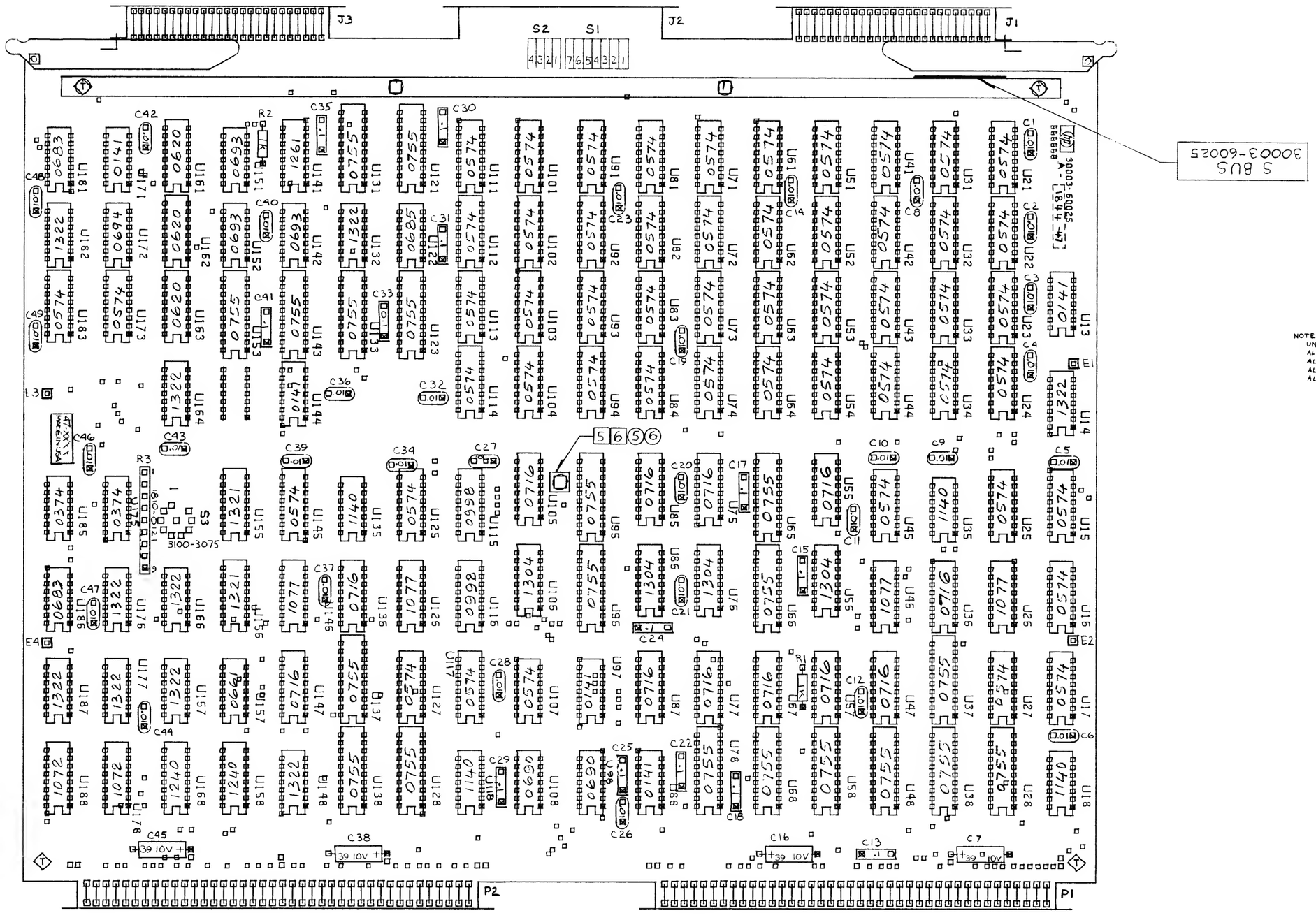

NOTE:
UNLESS OTHERWISE SPECIFIED
ALL RESISTANCE IN OHMS
ALL RESISTORS ARE 1/8 W 1%
ALL CAPACITANCE IN MICROFARADS
ALL IC'S ARE 1820-

S Bus PCA, 30003-60025, Sheet 4 of 4

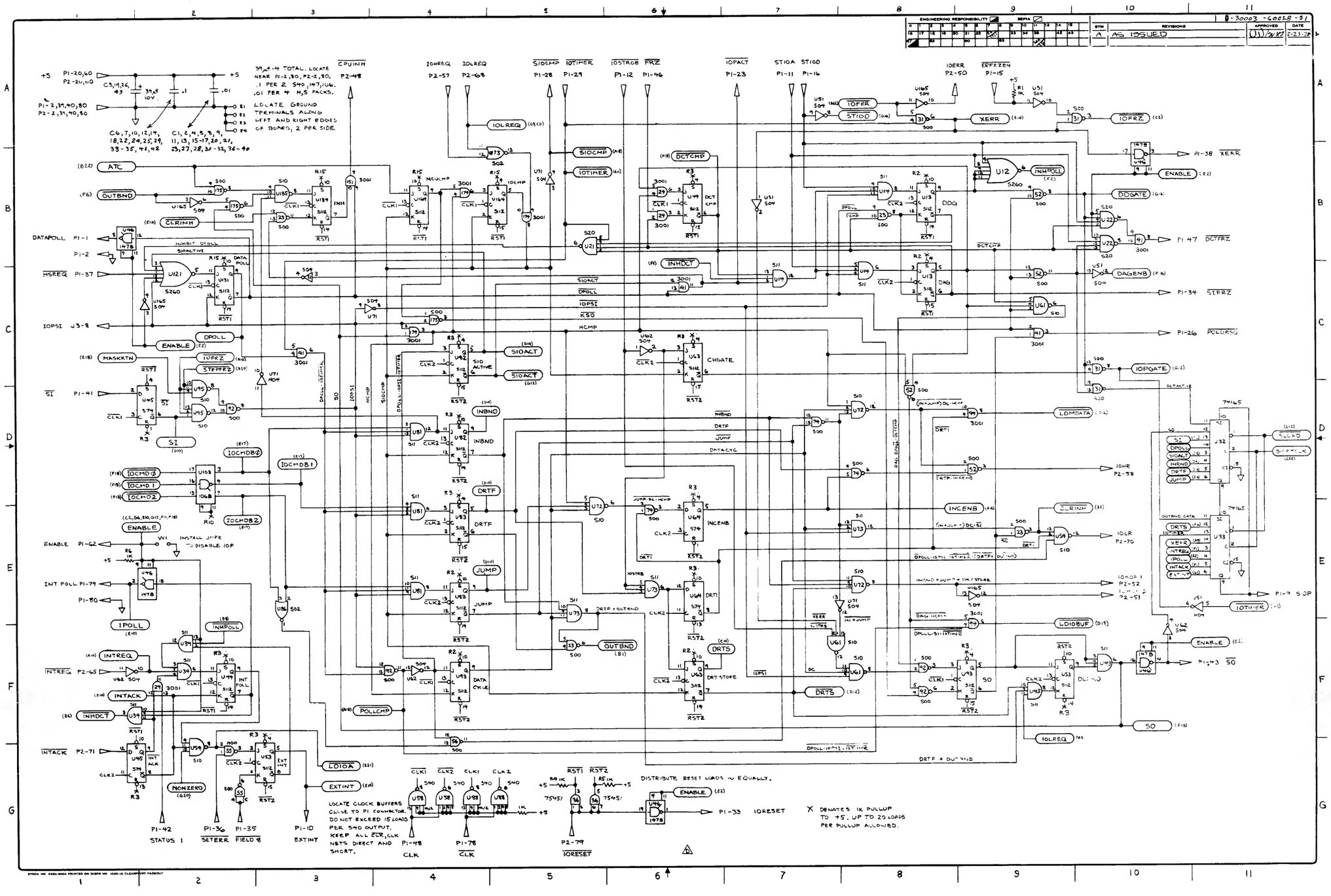

IOP PCA, 30003-60028, Sheet 1 of 3

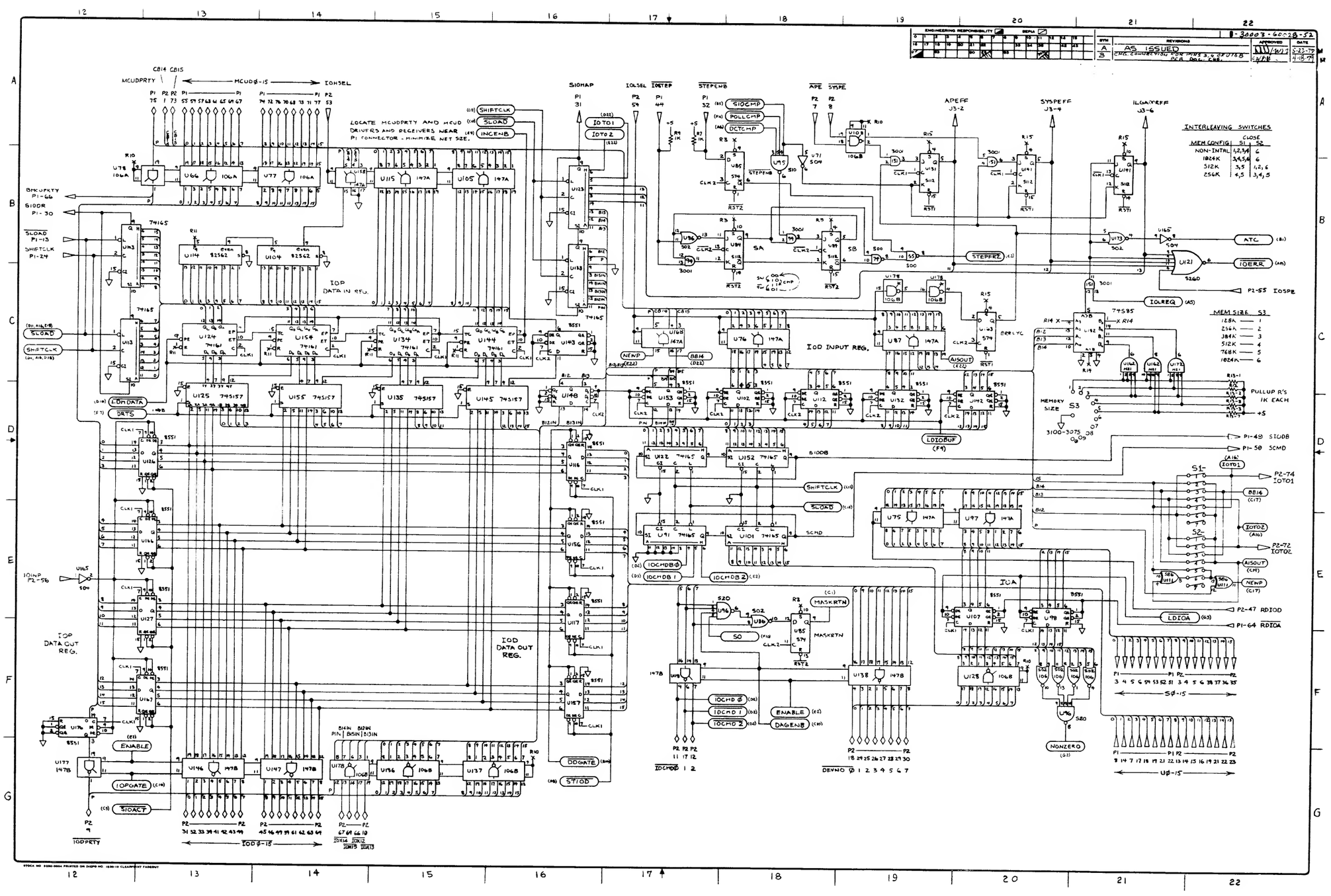

IOP PCA, 30003-60028, Sheet 2 of 3

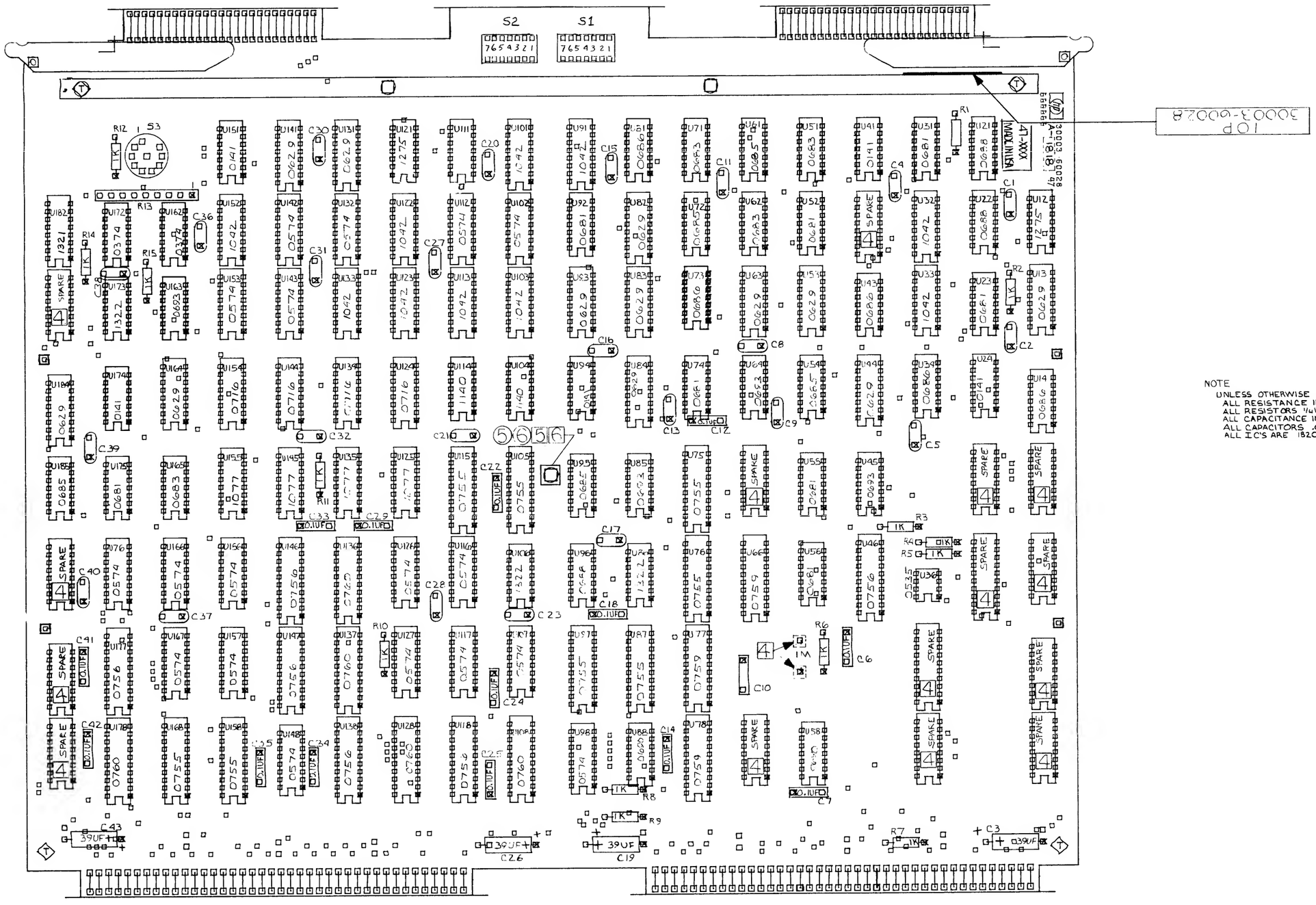

NOTE
UNLESS OTHERWISE SPECIFIED:
ALL RESISTANCE IN OHMS.
ALL RESISTORS ¼W, 5%
ALL CAPACITANCE IN MICROFARADS
ALL CAPACITORS .01UF CERAMIC DISC
ALL IC'S ARE 1820-

IOP PCA, 30003-60028, Sheet 3 of 3

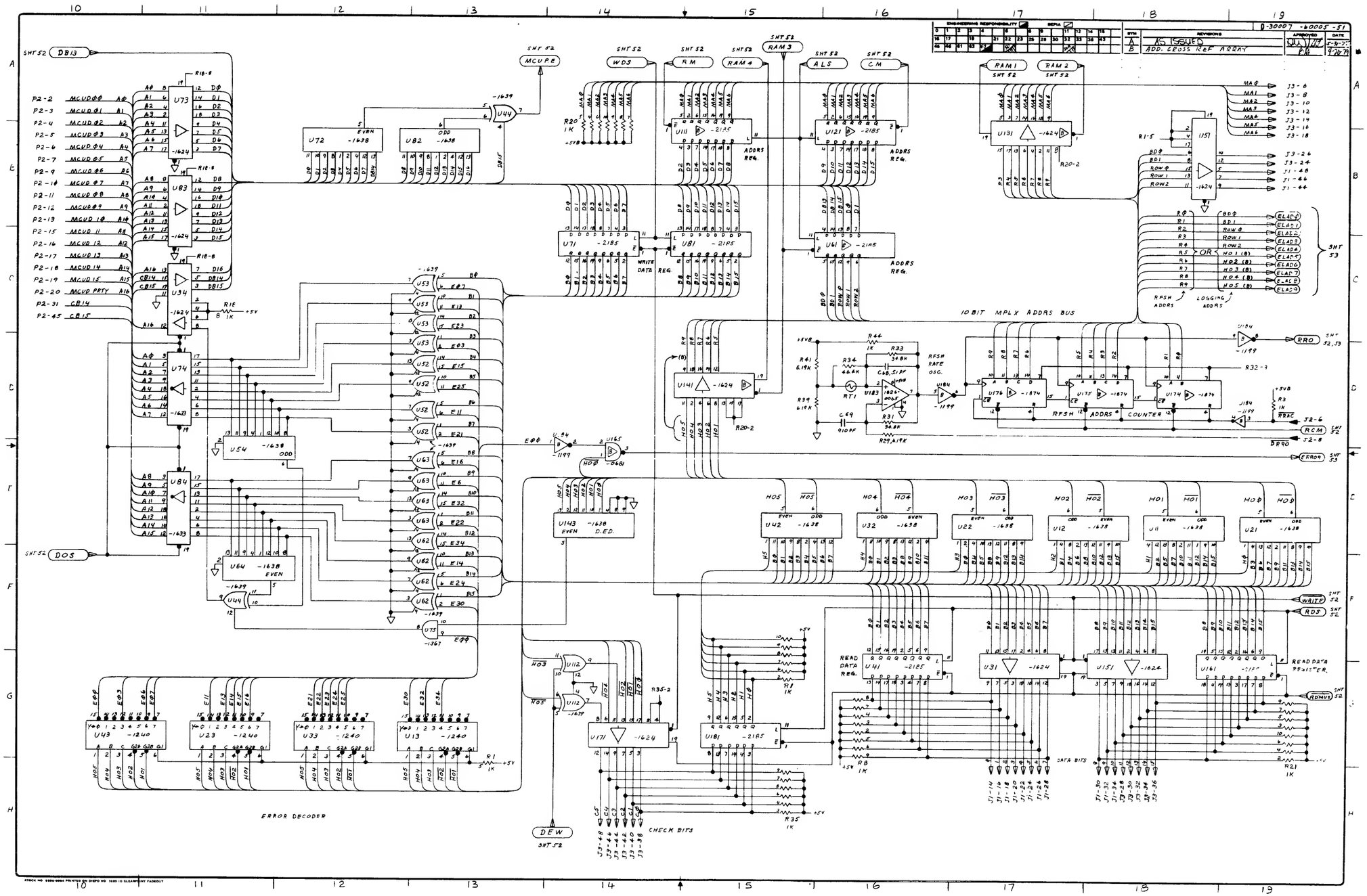

MCL PCA, 30007-60005, Sheet 1 of 4

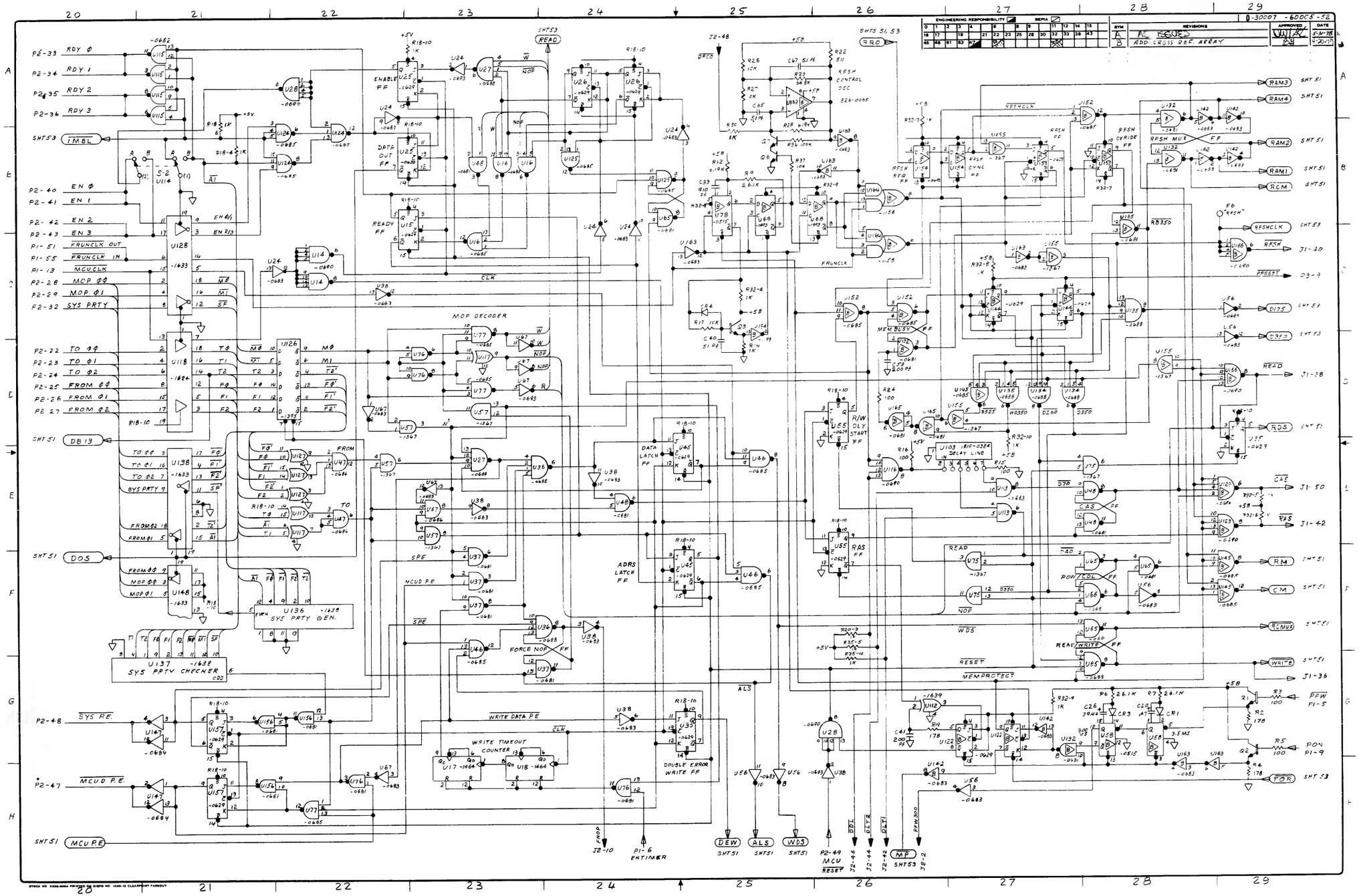

MCL PCA, 30007-60005, Sheet 2 of 4

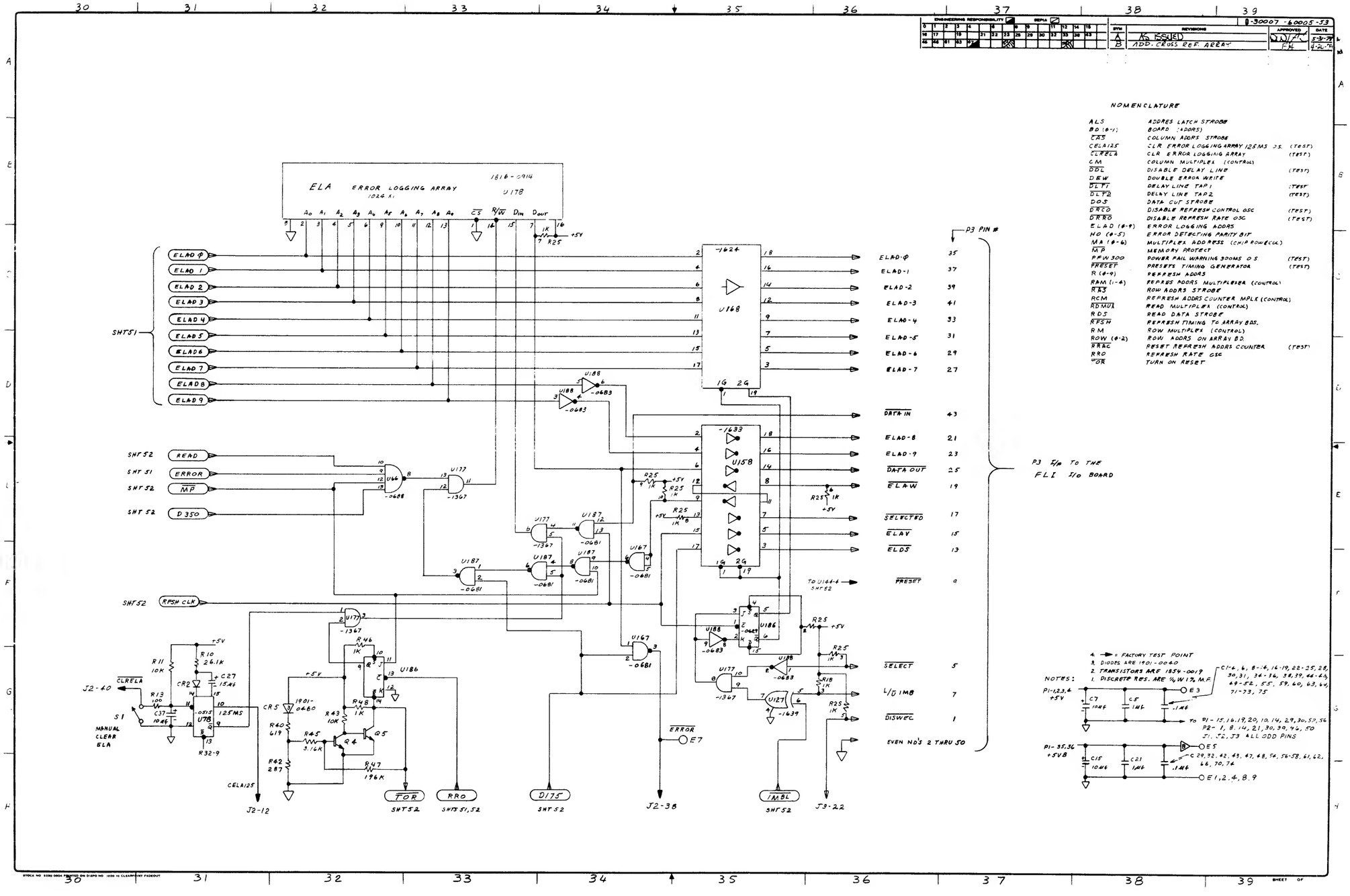

MCL PCA, 30007-60005, Sheet 3 of 4

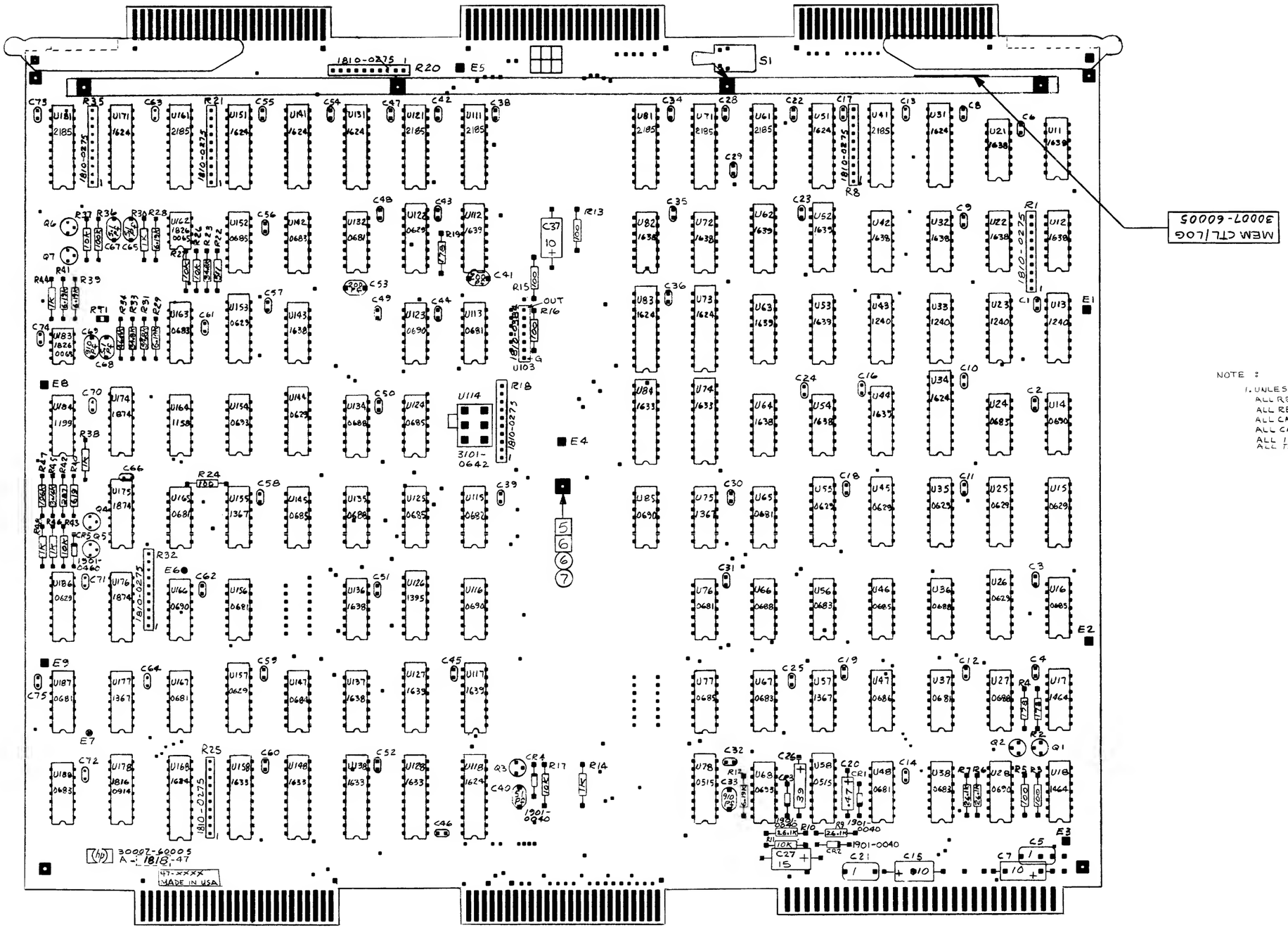

MCL PCA, 30007-60005, Sheet 4 of 4

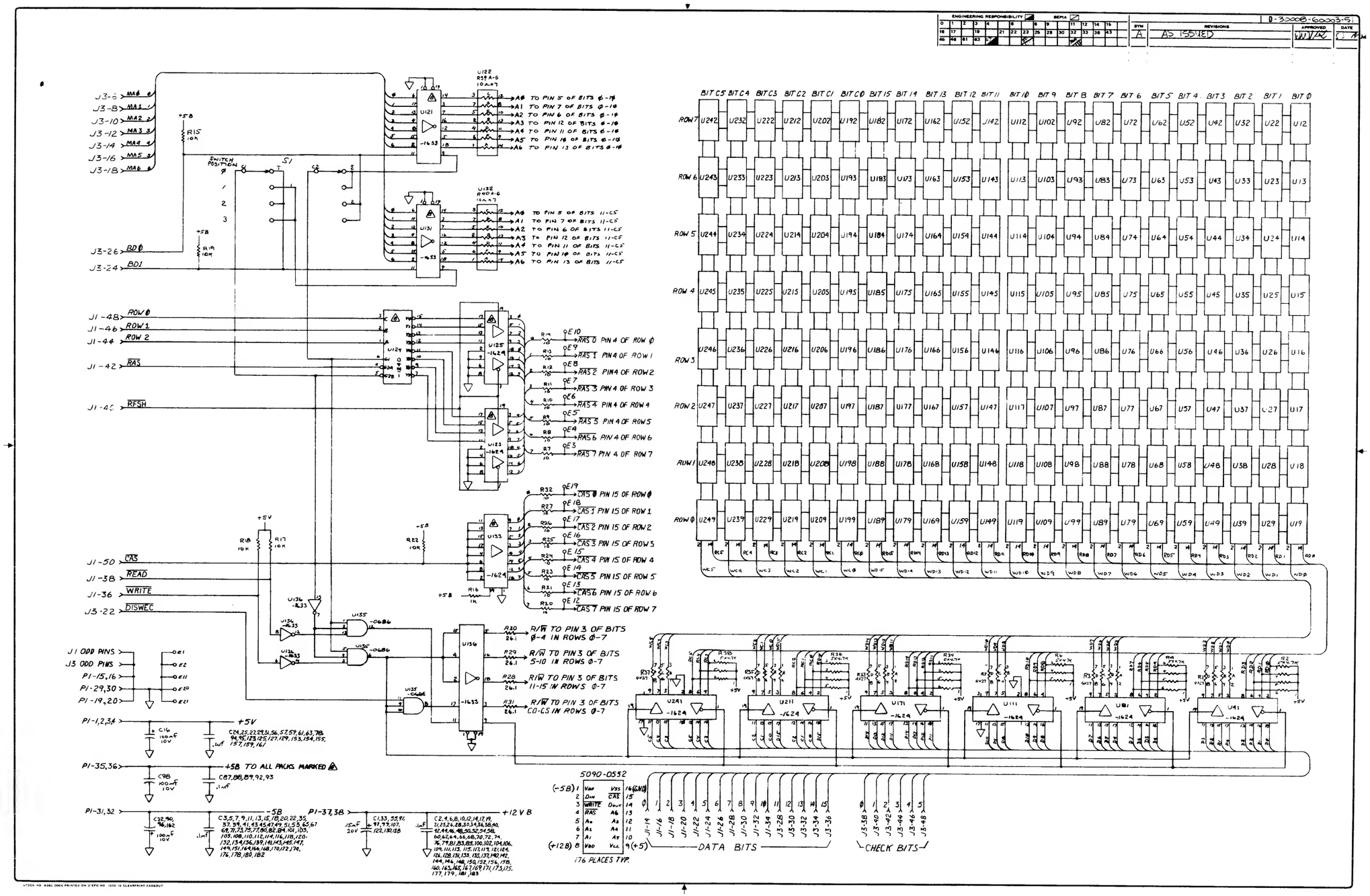

SMA PCA, 30008-60003, Sheet 1 of 2

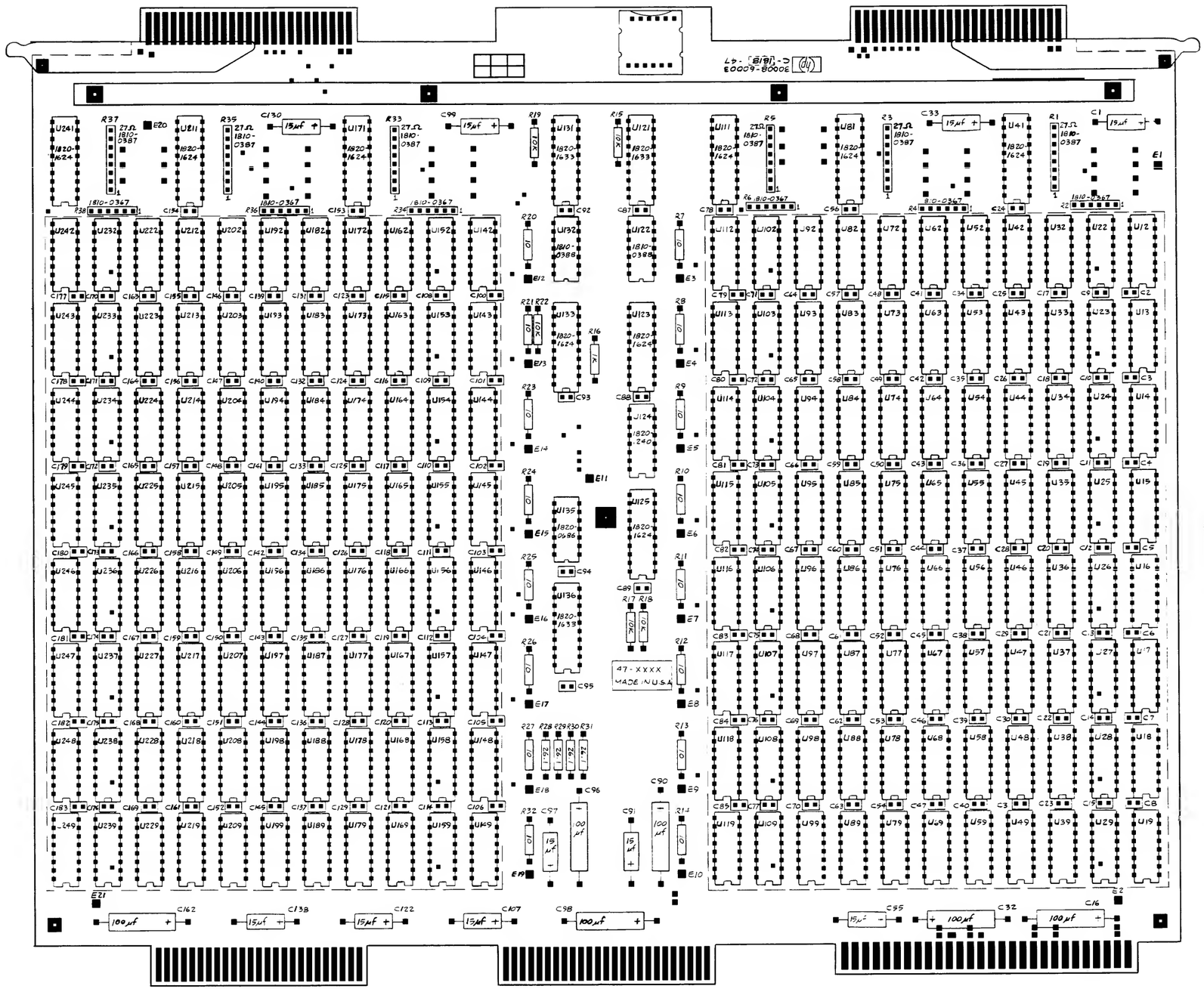

NOTE:
1. UNLESS OTHERWISE SPECIFIED:
ALL RESISTANCE IN OHMS
ALL RESISTORS 1/8W, 1%
ALL CAPACITANCE IN MICROFARADS
ALL CAPACITORS .1μf 0160-4583
ALL IC'S 5090-0552

SMA PCA, 30008-60003, Sheet 2 of 2

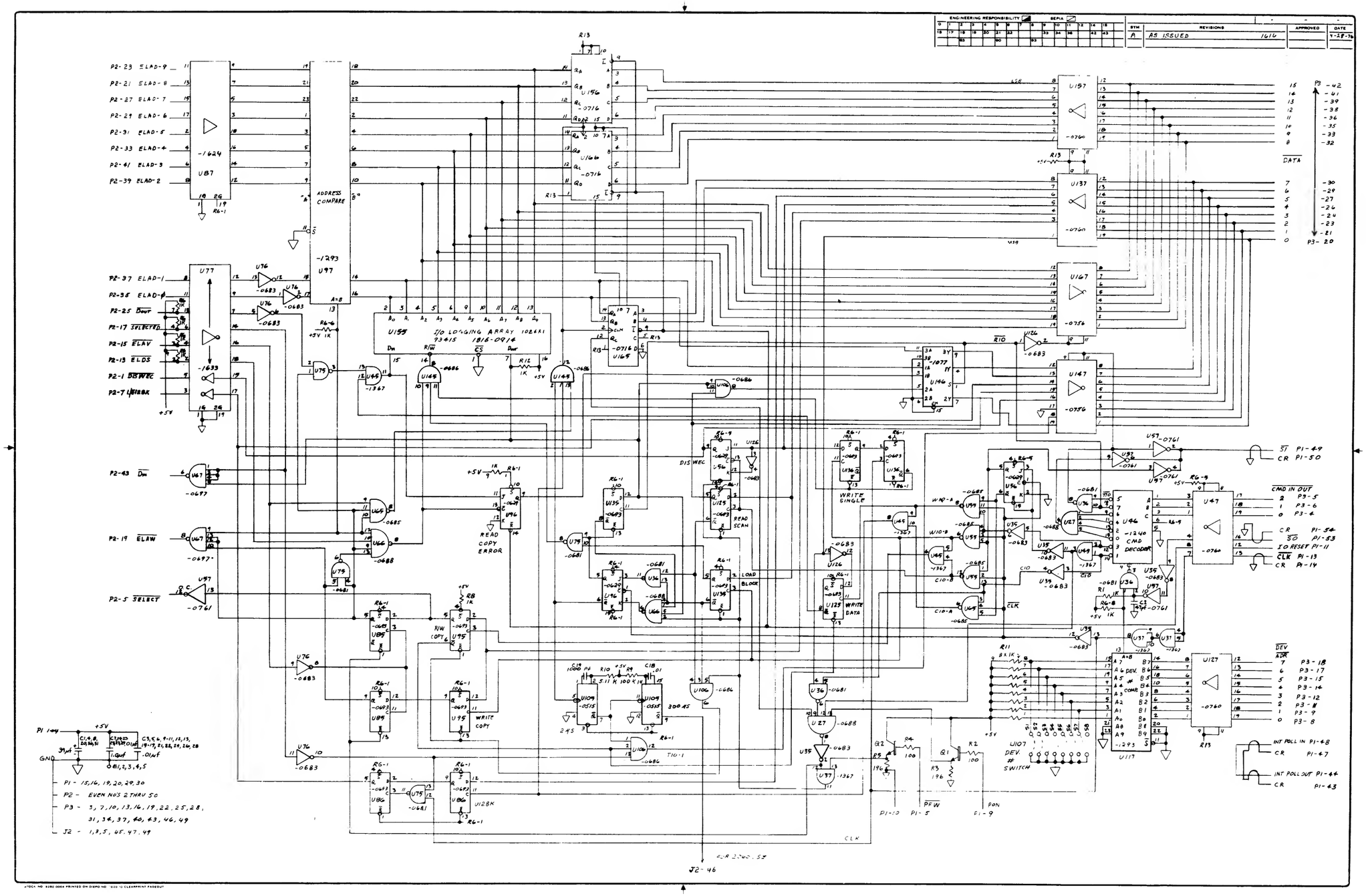

32421A ONLY FLI PCA, 30009-60002, Sheet 1 of 2

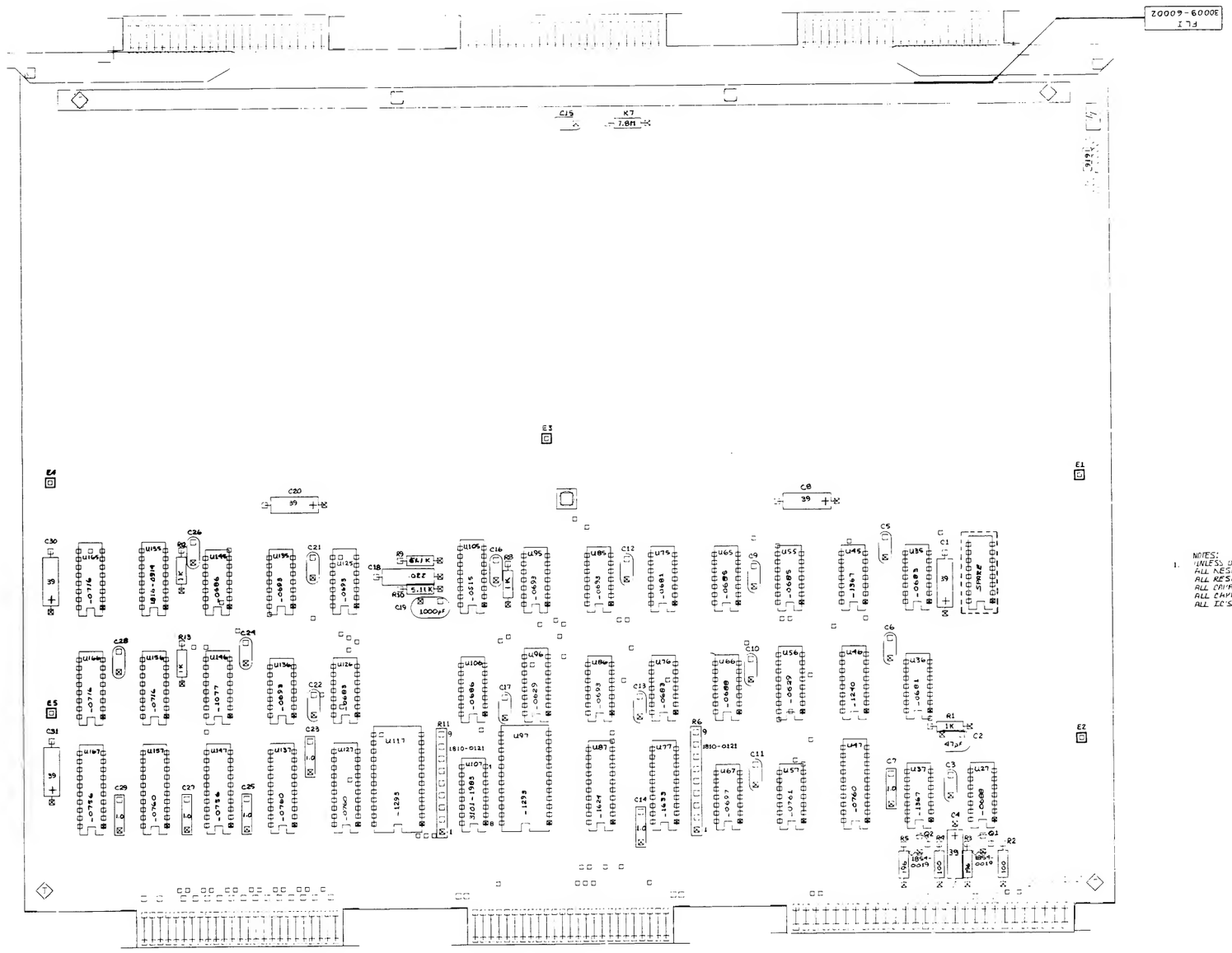

NOTES:
1. UNLESS OTHERWISE SPECIFIED:
ALL RESISTANCE IN OHMS
ALL RESISTORS 1/4 W 1%
ALL CAPACITANCE IN MICROFARADS
ALL CAPACITORS .01 UF CER DISC
ALL IC'S 1820-XXXX

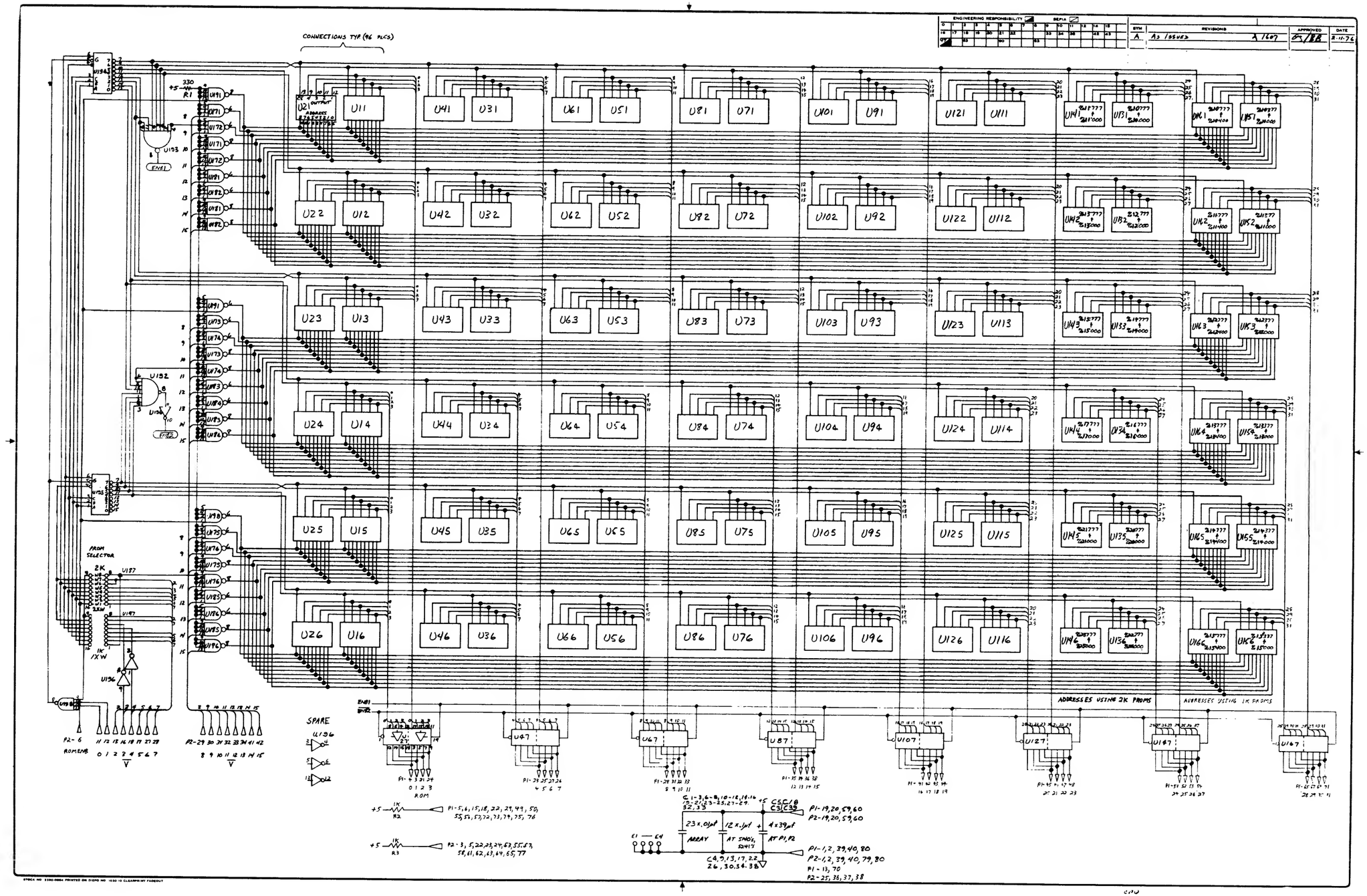

EIS PCA, 30012-60001, Sheet 1 of 2

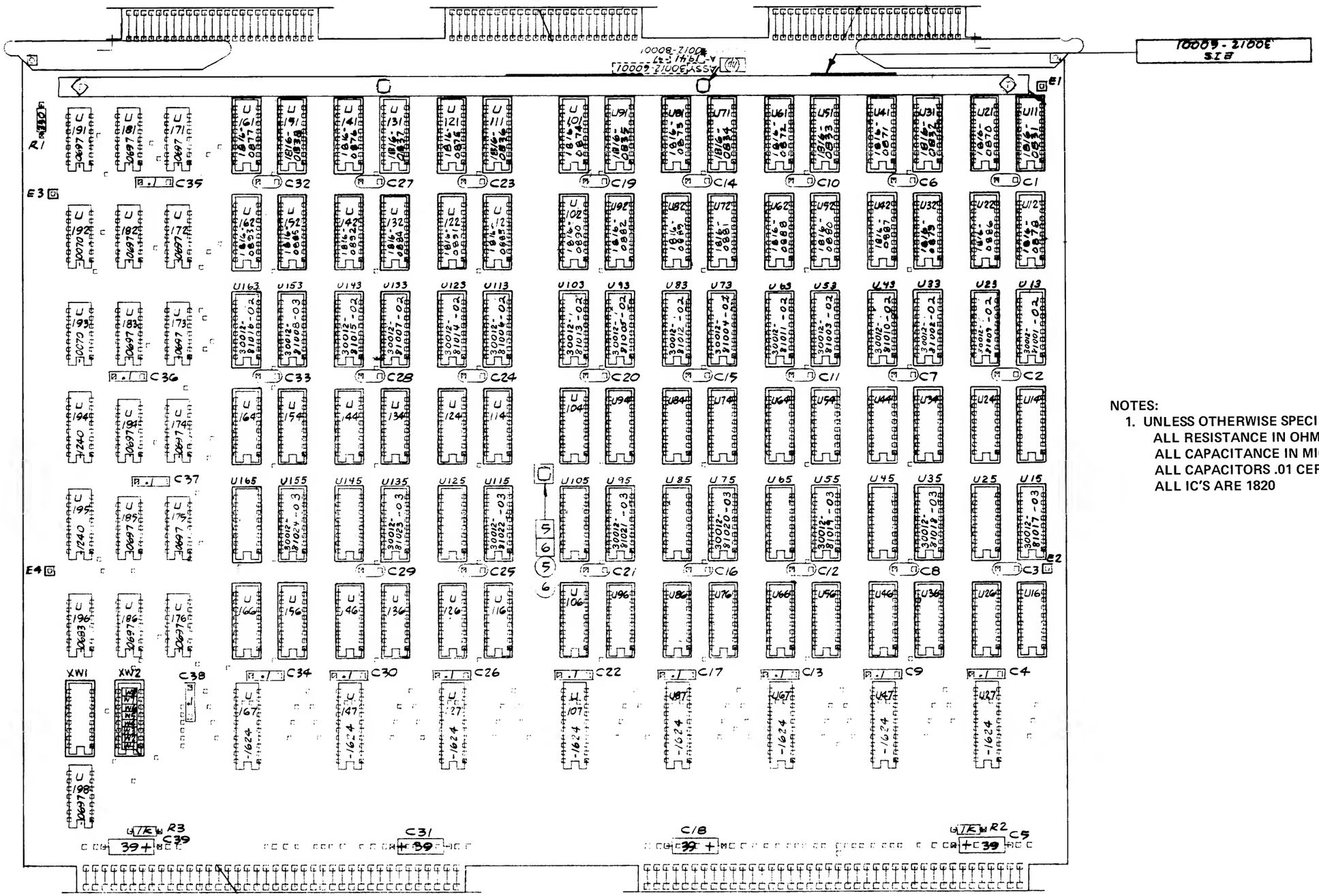

NOTES:

1. UNLESS OTHERWISE SPECIFIED:
   ALL RESISTANCE IN OHMS
   ALL CAPACITANCE IN MICROFARADS
   ALL CAPACITORS .01 CERAMIC DISC
   ALL IC'S ARE 1820

SECTION III - I/O PCAS

CONTENTS

PCA NO.	NAME
30001-60009	CTL Bus Terminator
30001-60016	IOP Bus Terminator
30001-60021	Power Bus Terminator
30003-60011	System Control Panel
30010-60001	Intelligent Network Processor--MPU
30010-60002	Intelligent Network Processor--DCI
30030-60003	Selector Channel Control
30030-60011	Selector Channel Sequencer
30030-60015	Selector Channel Bus Terminator
30030-60020	Selector Channel Port Controller
30030-60021	Selector Channel Register
30031-60001	System Clock
30032-60001	Terminal Data Interface
30032-60006	Terminal Connector/Multiplexer Panel
30033-60001	Selector Channel Maintenance
30035-60003	Multiplexer Channel Bus Terminator
30036-60002	Multiplexer Channel
30049-60003	Diagnostic Hardware Assembly
30050-60001	Universal Interface (TTL)
30050-60008	Card Reader Punch Interface
30051-60001	Universal Interface (Diff.)
30055-60001	Synchronous Single-Line Controller
30061-60001	Terminal Control Interface
30135-60063	System Clock/Fault Logging Interface
30202-60001	Disc File Read/Write
30202-60002	Disc File Bus
30202-60003	Disc Controller Processor
30206-60001	Card Reader Interface
30215-60002	Mag Tape Controller Processor
30215-60006	9 TRK. Mag Tape Controller
30226-60001	Plotter Interface
30229-60001	Cartridge Disc Interface
30229-60003	Cartridge Disc Terminator
30354-60001	Maintenence Panel Assembly
30354-60003	Maintenance Panel Interface
30360-60001	Hardwired Serial Interface

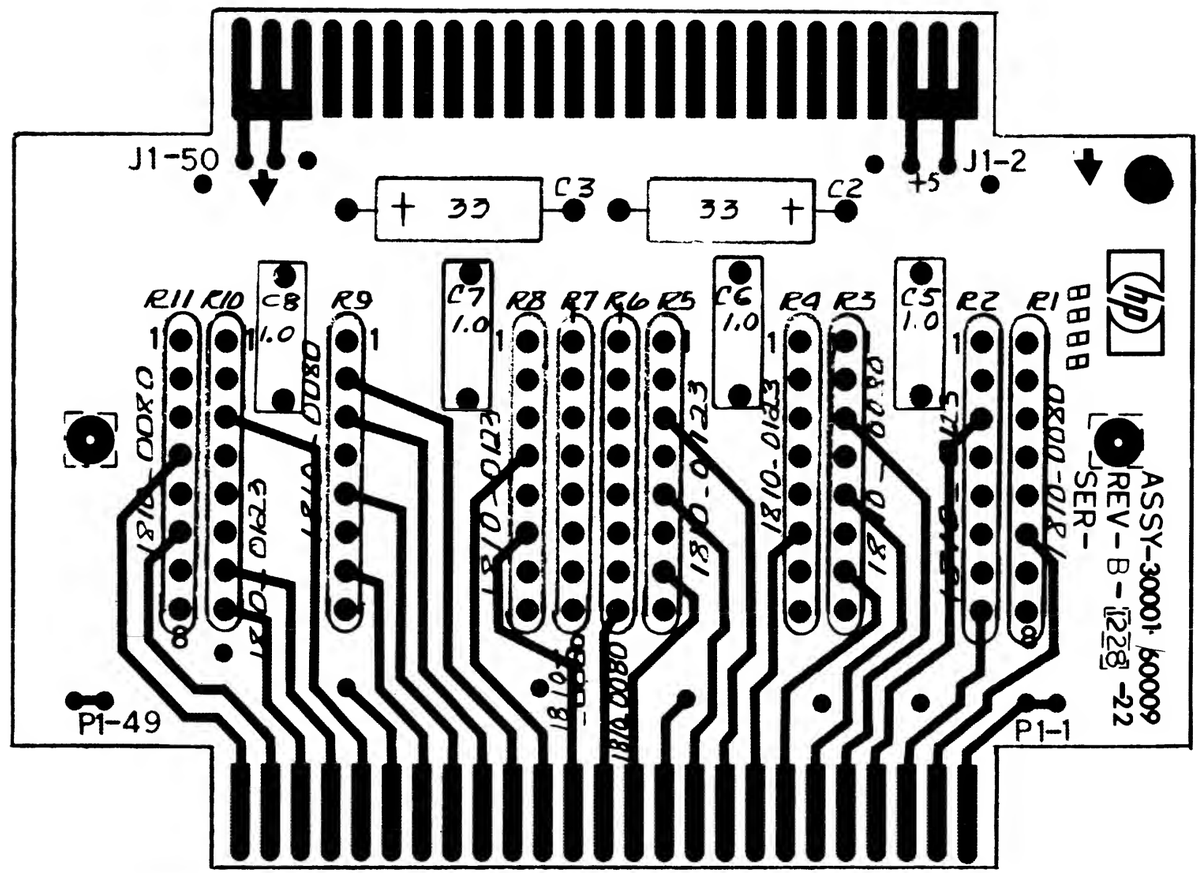

NOTE

UNLESS OTHERWISE SPECIFIED,
ALL CAPACITANCE IN MICROFARADS.
ALL RESISTANCE IN OHMS.

CTL Bus Terminator, 30001-60009, Sheet 1 of 2

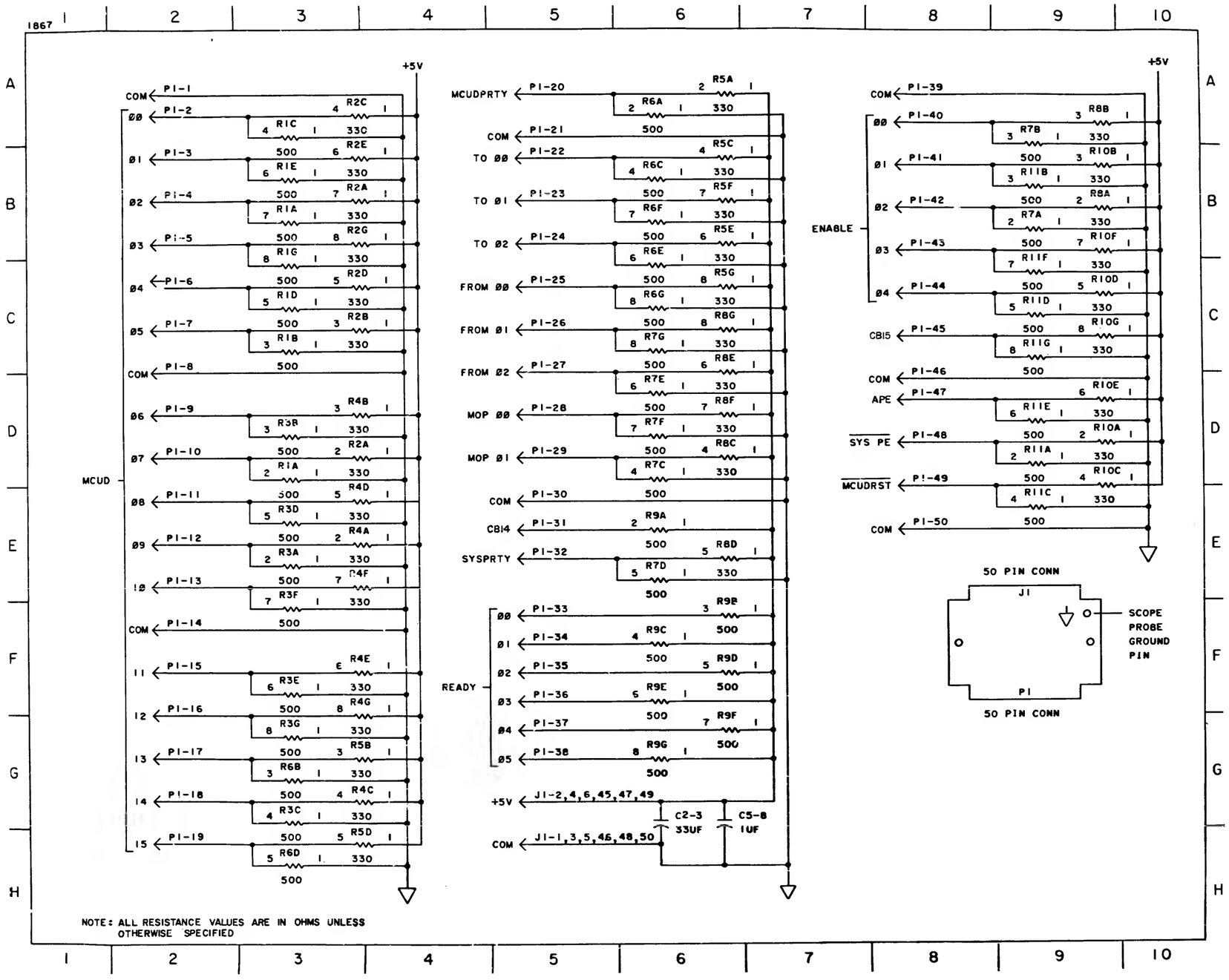

NOTE: ALL RESISTANCE VALUES ARE IN OHMS UNLESS OTHERWISE SPECIFIED

CTL Bus Terminator, 30001-60009, Sheet 2 of 2

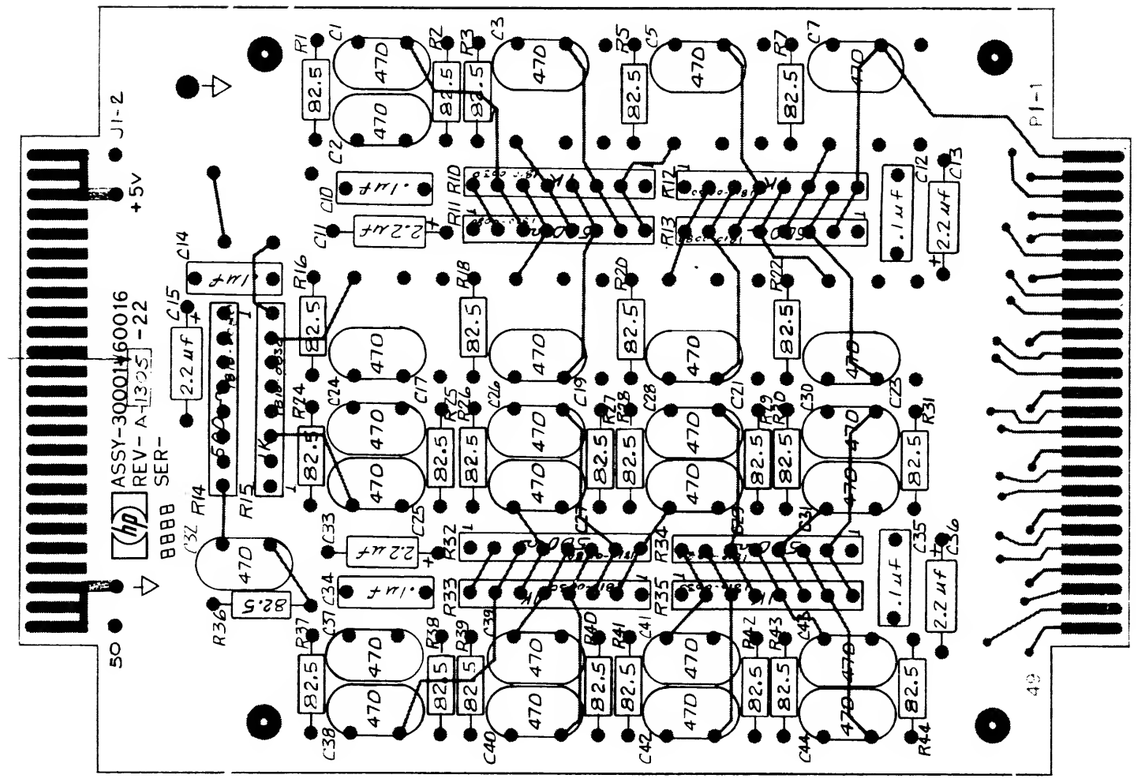

NOTE:

1. UNLESS OTHERWISE SPECIFIED:
   ALL RESISTANCE IN OHMS
   ALL RESISTORS 1/8W 1% MF
   ALL CAPACITANCE IN PICO FARADS

CHANGE	REFERENCE	REVISION/PREFIX
A	ORIG.	A-1210-22
B	REDRAWN	NO CHANGE
C	22-1662	A-1305-22
D	ERRATA	NO CHANGE

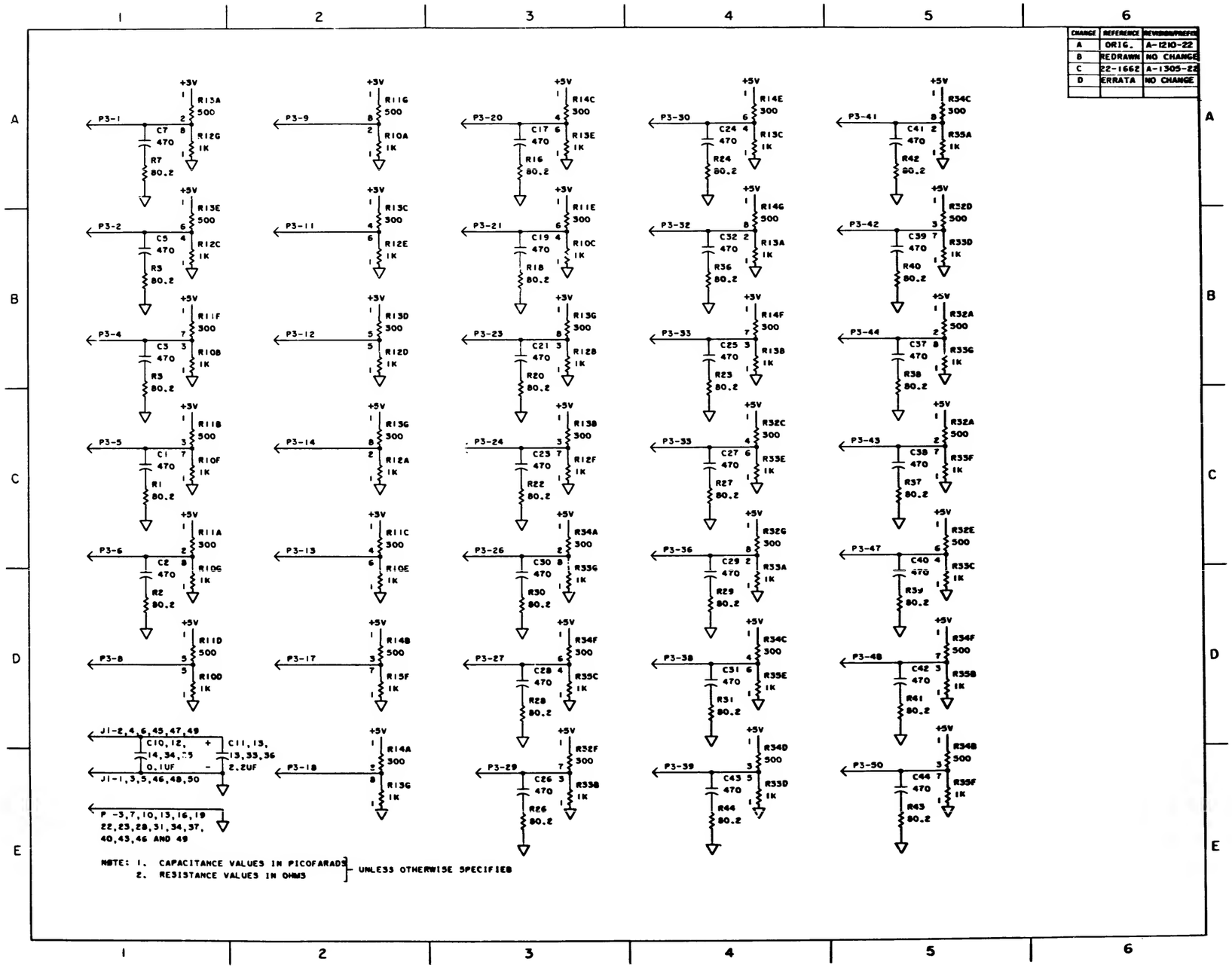

IOP Bus Terminator, 30001-60016, Sheet 2 of 2

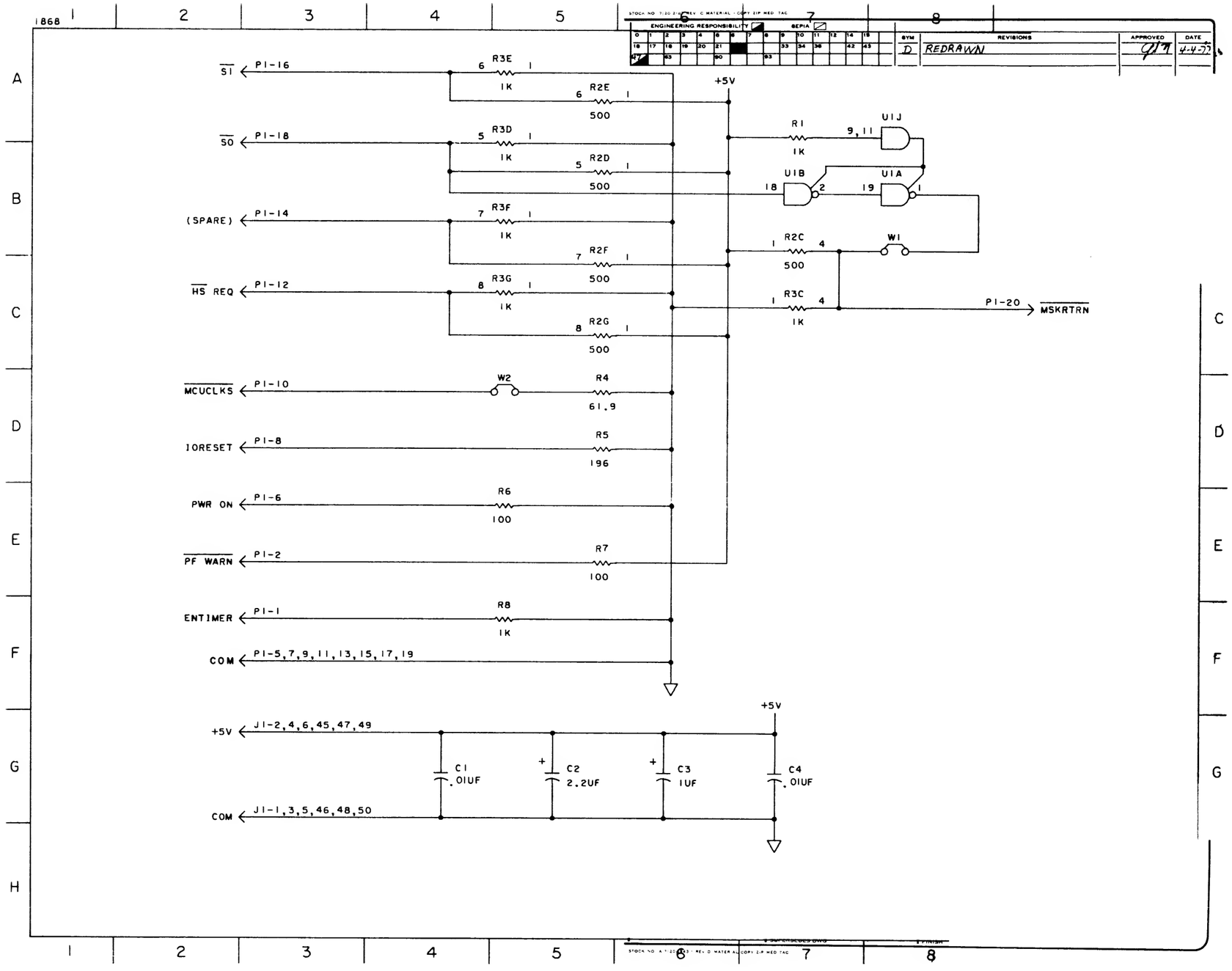

Power Bus Terminator, 30001-60021, Sheet 1 of 2

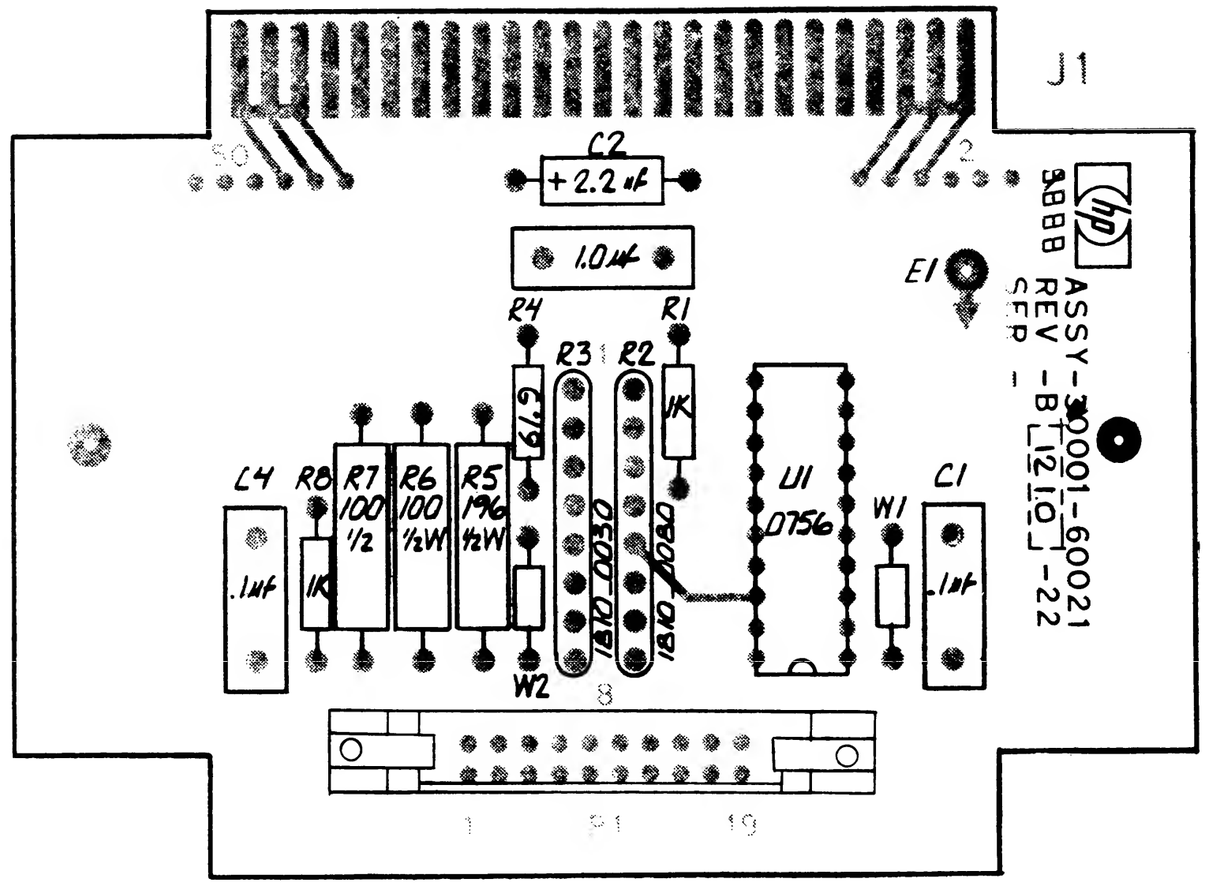

NOTE

UNLESS OTHERWISE SPECIFIED
ALL RESISTANCE IN OHMS
ALL RESISTORS 1/4W_1%_MF
ALL CAPACITANCE IN MICRO_FARADS

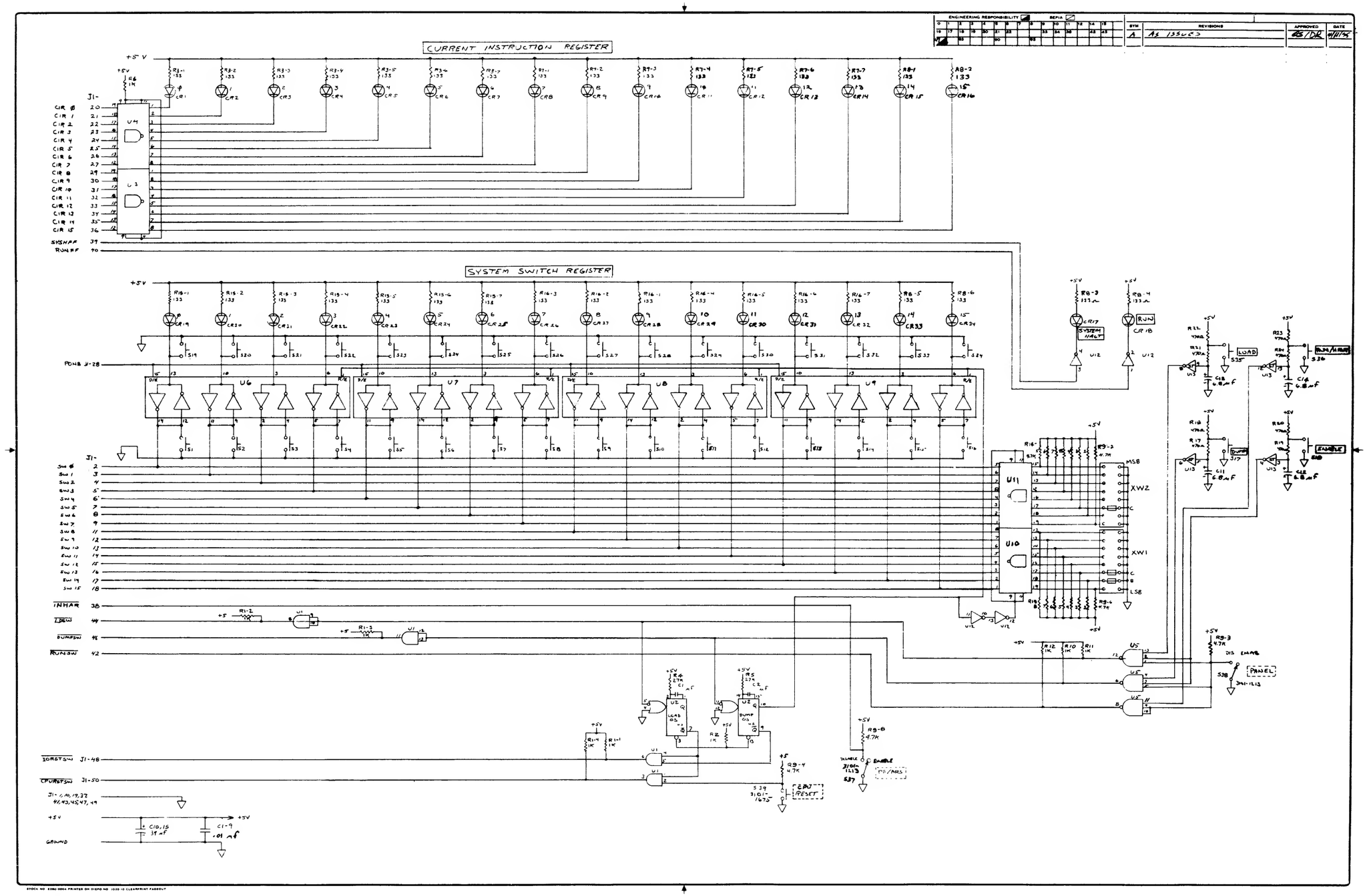

System Control Panel, 30003-60011, Sheet 1 of 2

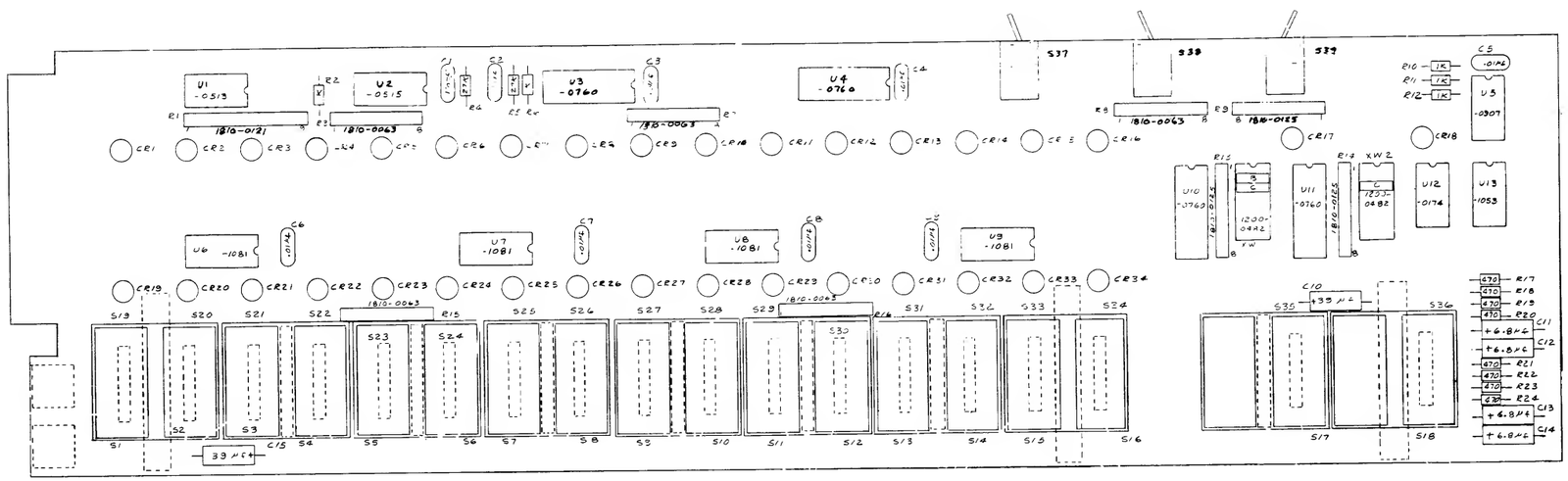

NOTES:
1. UNLESS OTHERWISE SPECIFIED:
ALL RESISTANCE IN OHMS
ALL RESISTORS 1/4W, ±5%
ALL DIODES 1990-0325

System Control Panel, 30003-60011, Sheet 2 of 2

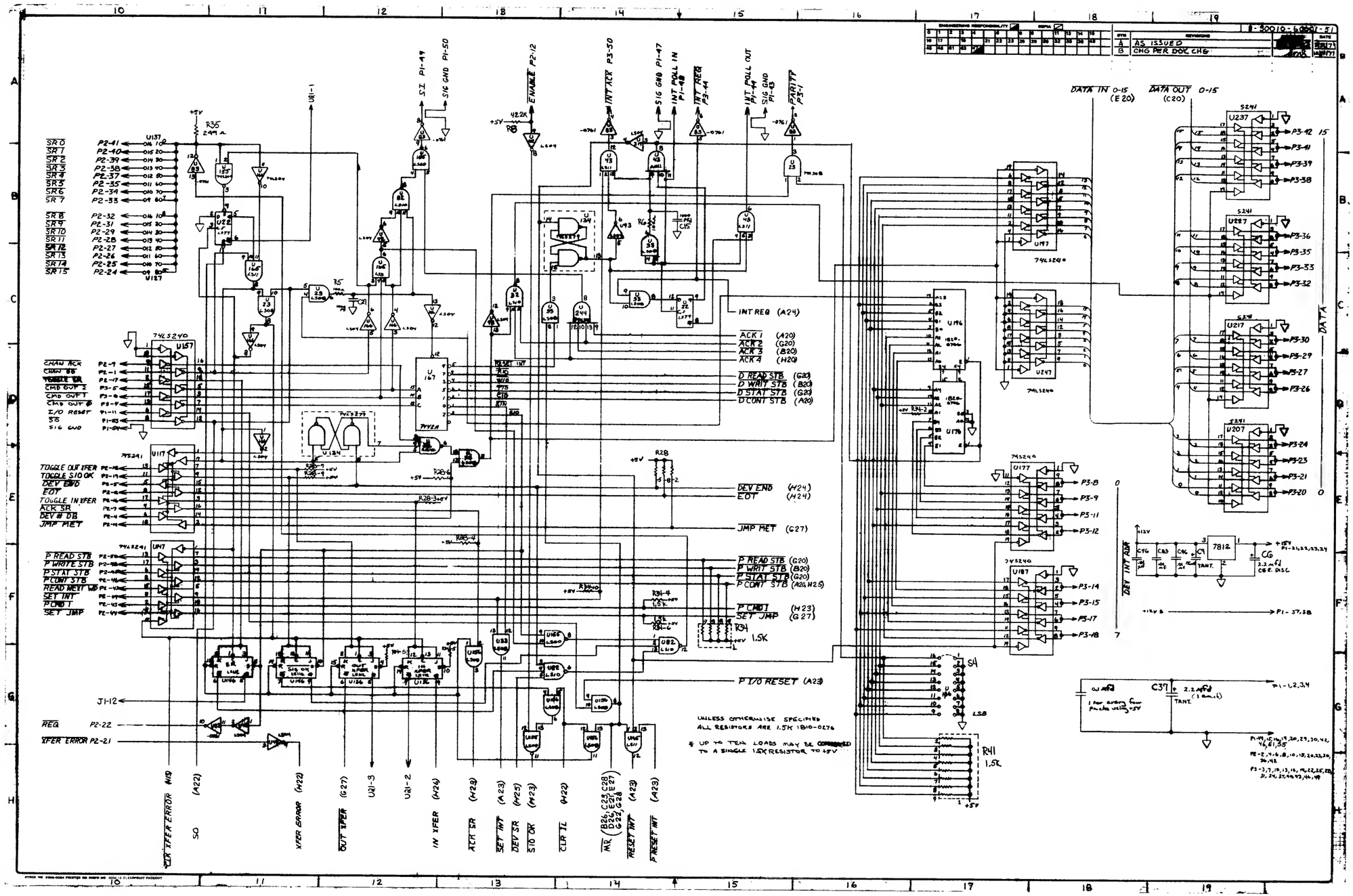

INP MPU PCA, 30010-60001, Sheet 1 of 6

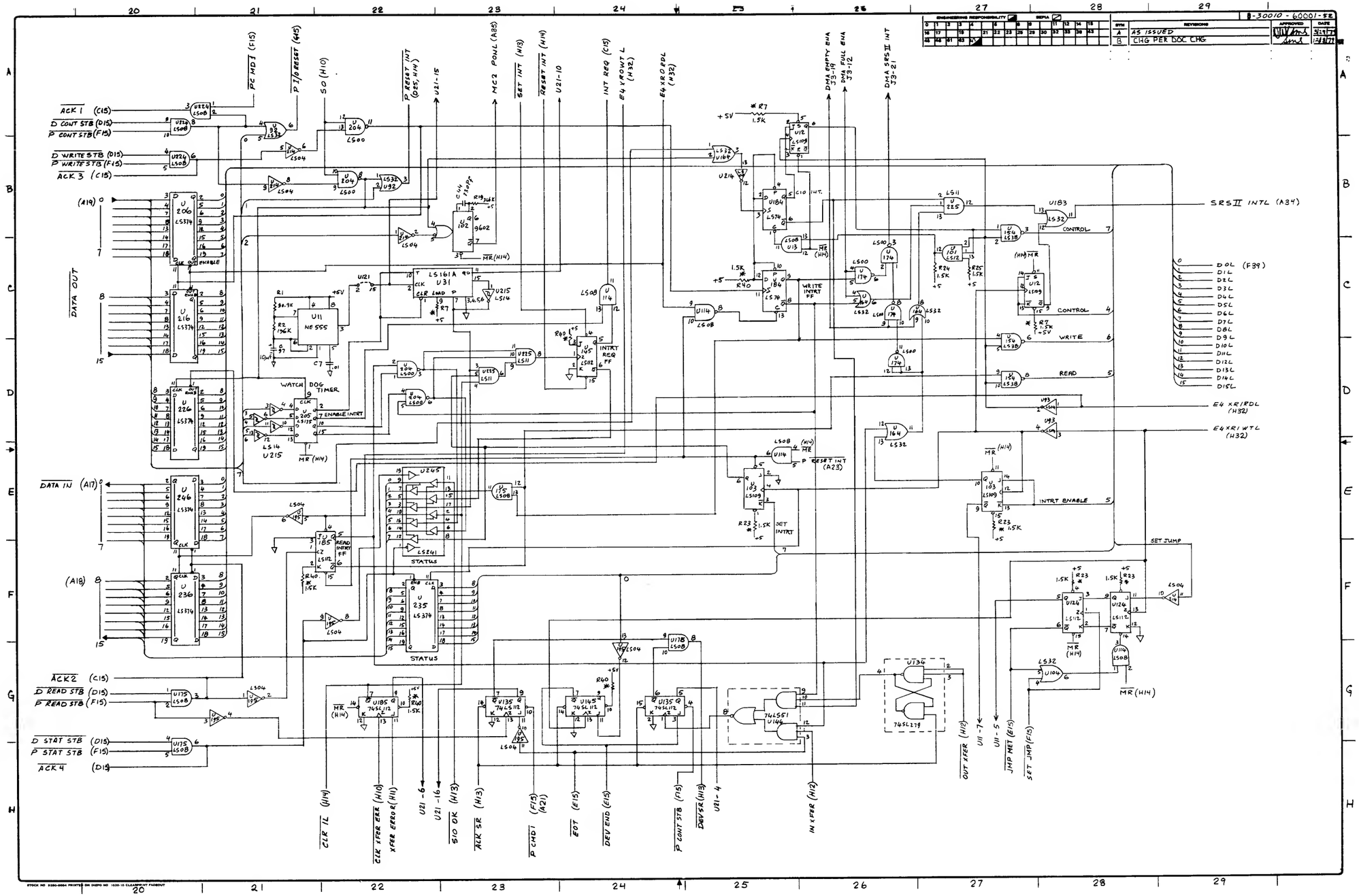
ACK 1 (C15)
D CONT STB (D15)
P CONT STB (F15)
D WRITE STB (D15)
P WRITE STB (F15)
ACK 3 (C15)
DATA OUT
DATA IN (A17)
ACK 2 (C15)
D READ STB (D15)
P READ STB (F15)
D STAT STB (D15)
P STAT STB (F15)
ACK 4 (D15)
WATCH DOG TIMER
STATUS
SRS II INTL (A34)
D0L (F39)
E4 XRIRDL (H32)
E4XRIWTL (H32)
SET JUMP
CLR IL (H14)
CLR XFER ERR (H10)
XFER EFED R (H11)
S10 OK (H13)
ACK SR (H13)
P CMD1 (F15) (A21)
EOT (E15)
DEV END (E15)
P CONT STB (F15)
DEV SR (H13)
IN XFER (H12)
OUT XFER (H12)
JMP MET (E15)
SET JMP (E15)

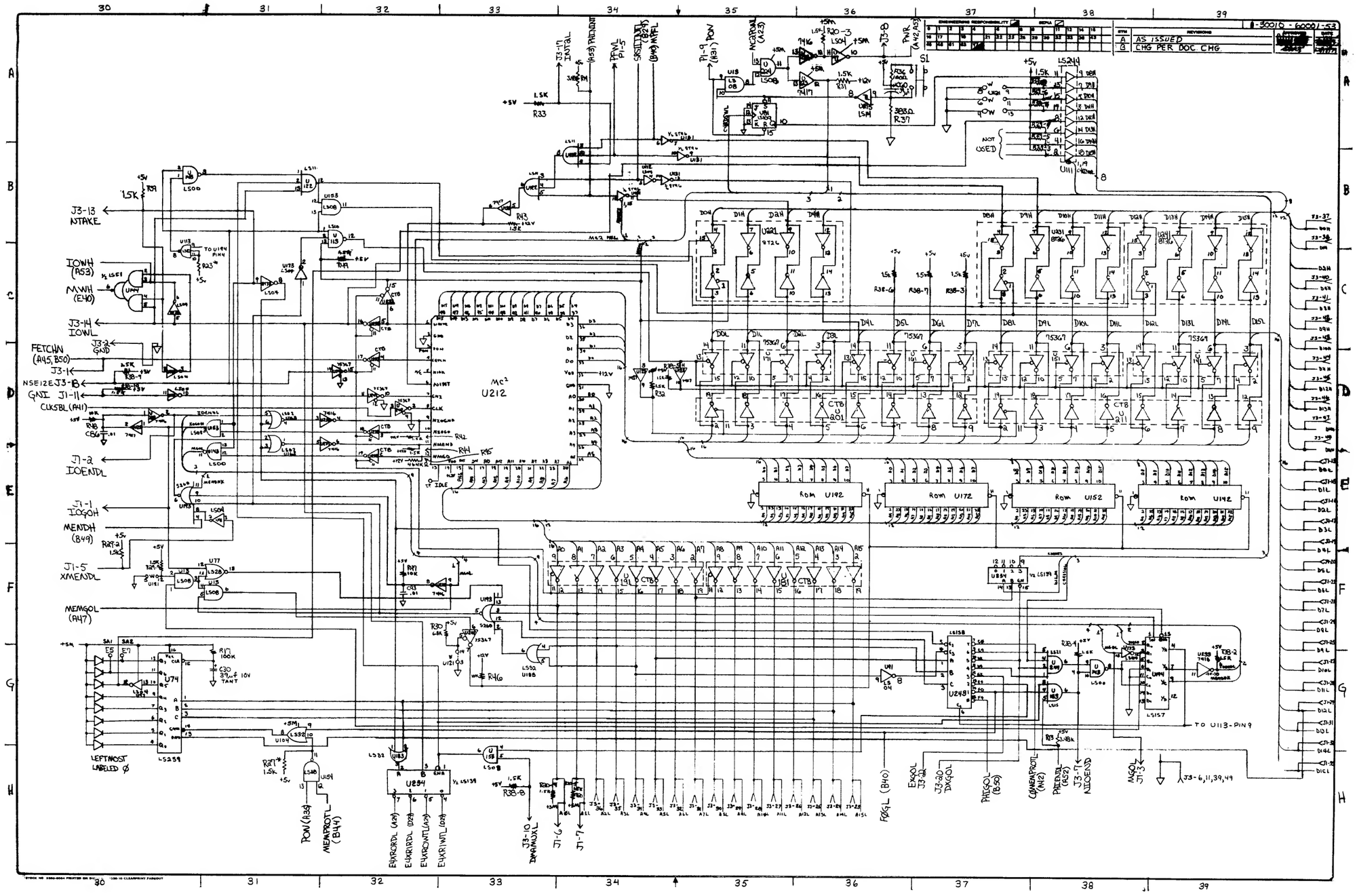

INP MPU PCA, 30010-60001, Sheet 3 of 6

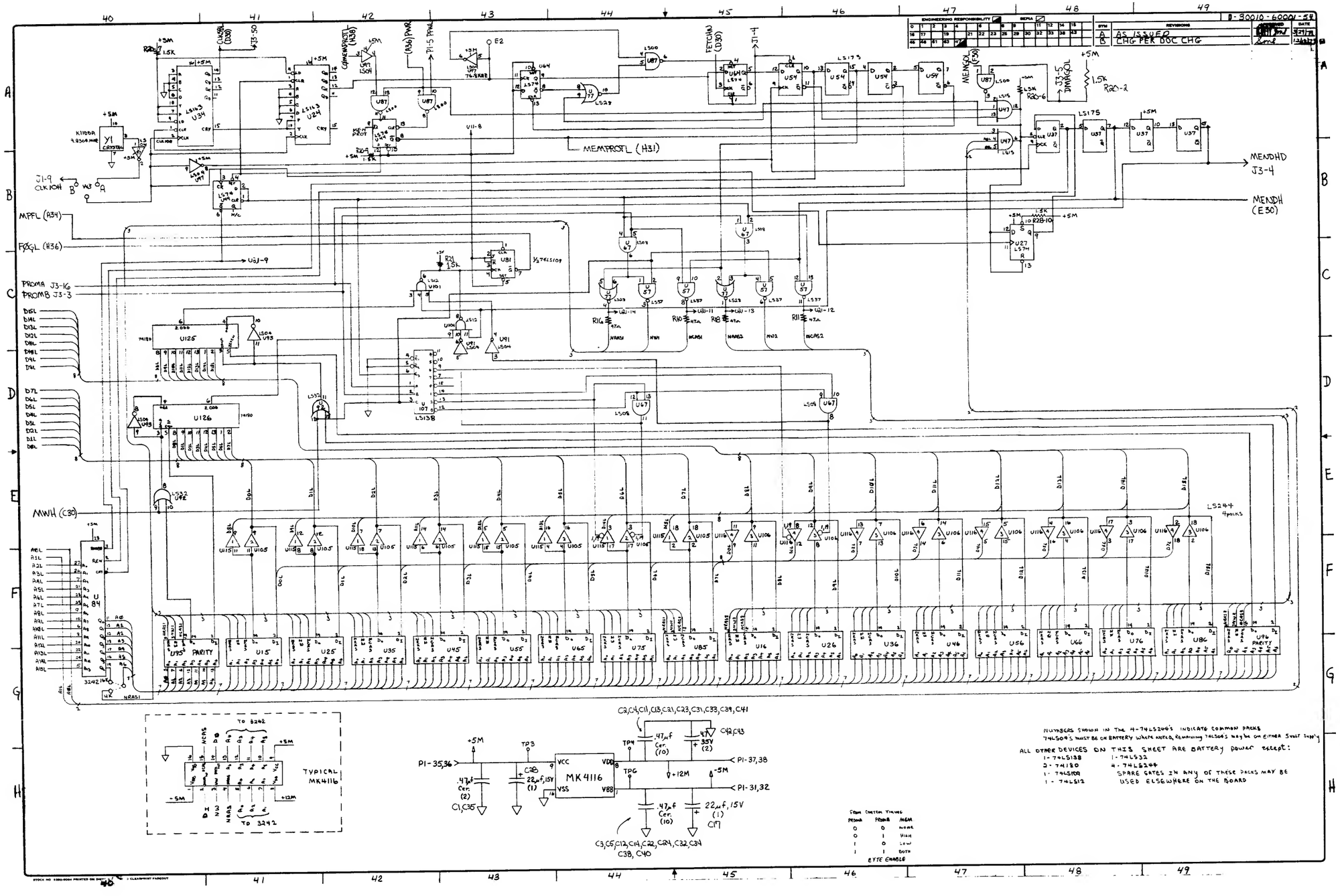

INP MPU PCA, 30010-60001, Sheet 4 of 6

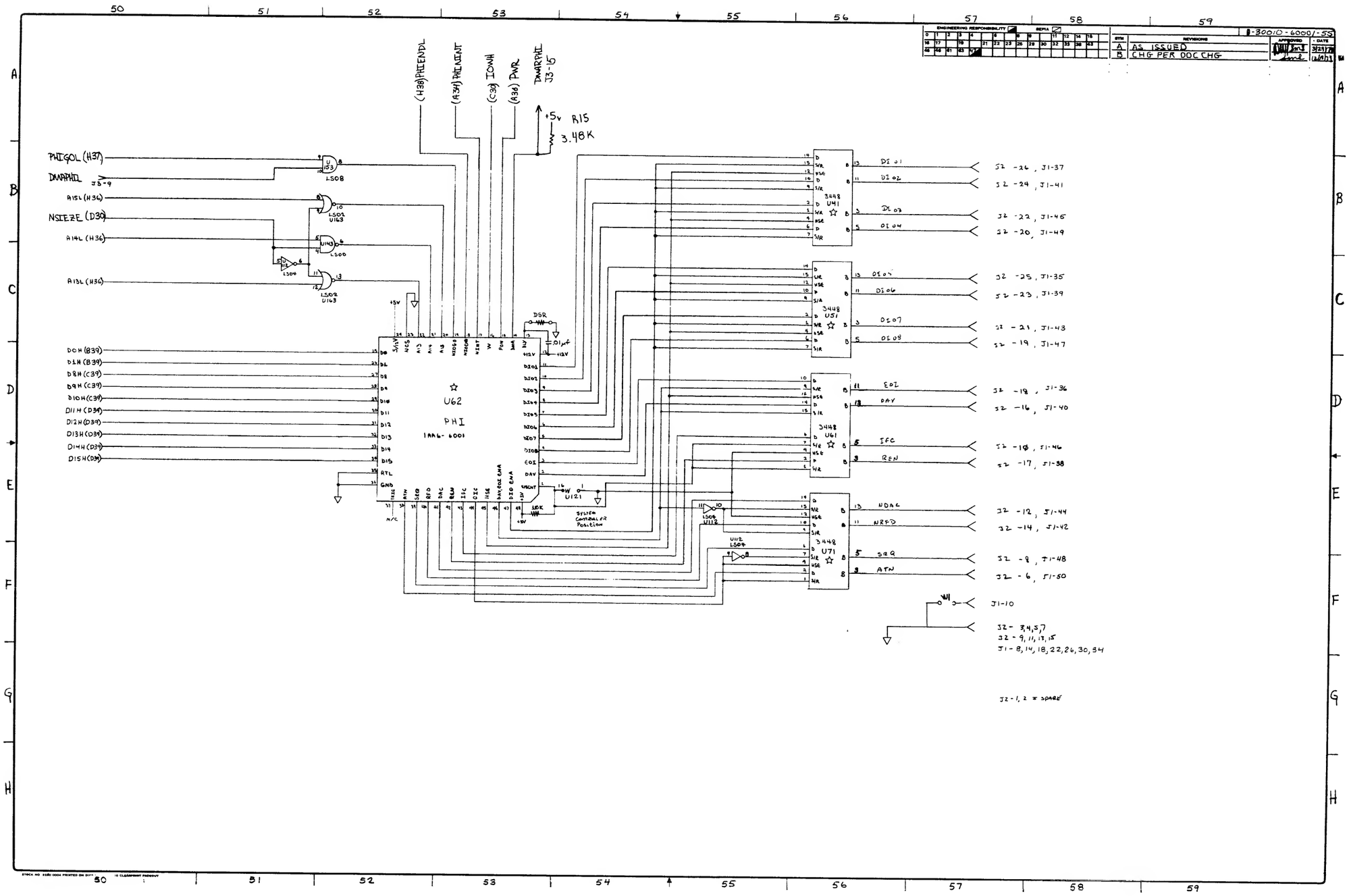
30010-60001-55
REVISIONS
A AS ISSUED
B CHG PER DOC CHG
(H38) PHIENDL
(A34) PHIENUT
(C38) IOWN
(A36) PWR
DMAPHIL J3-15
+5v R15 3.48K
PHIGOL (H37)
DMAPHIL J3-9
A15L (H36)
NSIEZE (D30)
A14L (H36)
A13L (H36)
LS08
LS02 U163
LS00
LS04
D0H (B39)
D1H (B39)
D8H (C39)
D9H (C39)
D10H (C39)
D11H (D39)
D12H (D39)
D13H (D39)
D14H (D39)
D15H (D39)
U62
PHI
1AA6-6001
DSR
U121
SYSTEM CONTROLLER POSITION
U112 LS04
3448 U41
3448 U51
3448 U61
3448 U71
DI01
DI02
DI03
DI04
DI05
DI06
DI07
DI08
IDI
DAV
IFC
REN
NDAC
NRFD
SRQ
ATN
J2-26, J1-37
J2-24, J1-41
J2-22, J1-45
J2-20, J1-49
J2-25, J1-35
J2-23, J1-39
J2-21, J1-43
J2-19, J1-47
J2-18, J1-36
J2-16, J1-40
J2-10, J1-46
J2-17, J1-38
J2-12, J1-44
J2-14, J1-42
J2-8, J1-48
J2-6, J1-50
J1-10
J2-3,4,5,7
J2-9,11,13,15
J1-8,14,18,22,26,30,34
J2-1,2 = SPARE

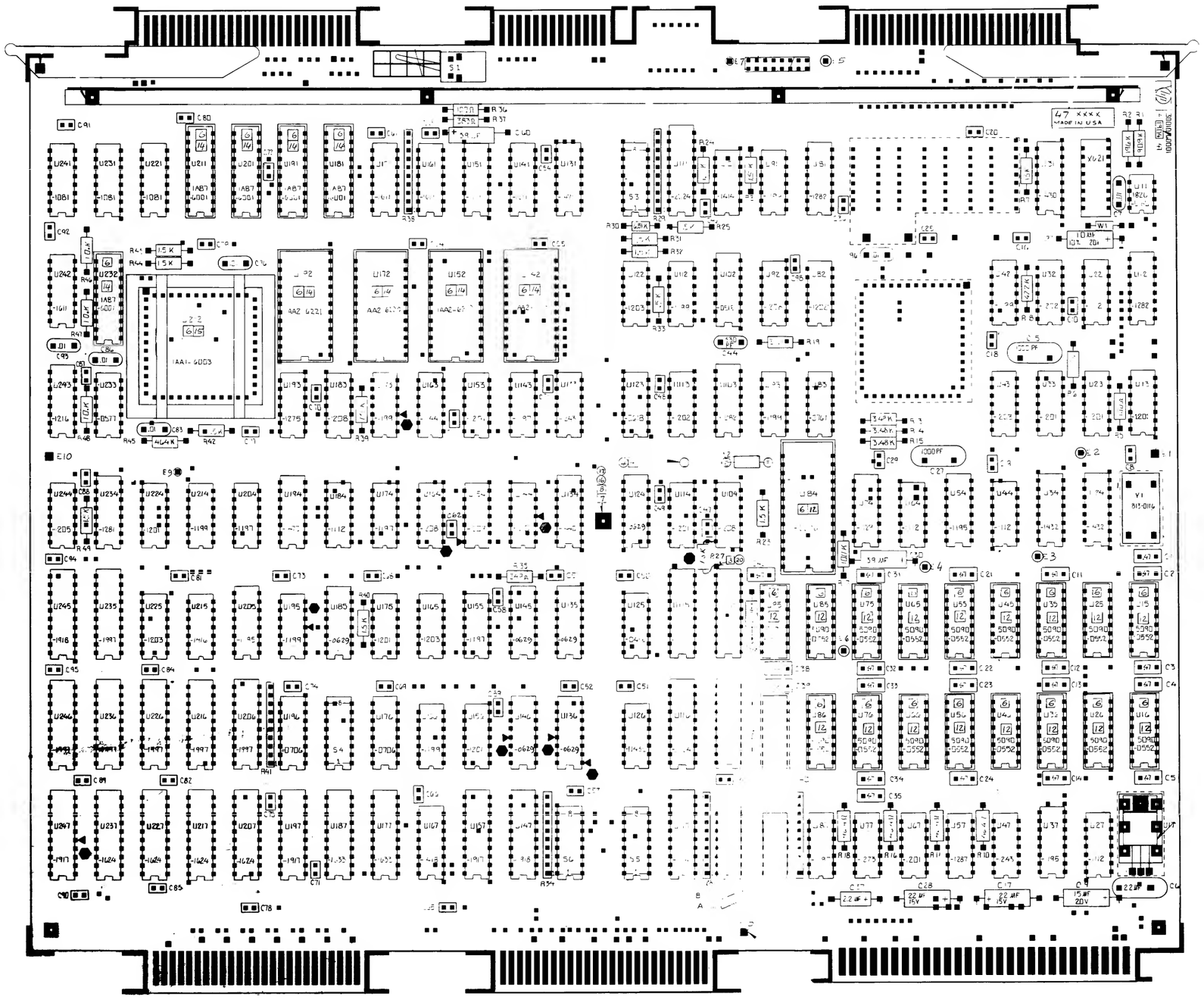

NOTES:
UNLESS OTHERWISE SPECIFIED
ALL RESISTANCE IN OHMS
ALL RESISTORS ARE 1/8W 5%
ALL CAPACITANCE VALUES IN MICROFARADS
ALL CAPACITORS ARE .1 MF
ALL RESISTOR PACKS ARE 1.5 K
ALL IC'S ARE 1820

INP MPU PCA, 30010-60001, Sheet 6 of 6

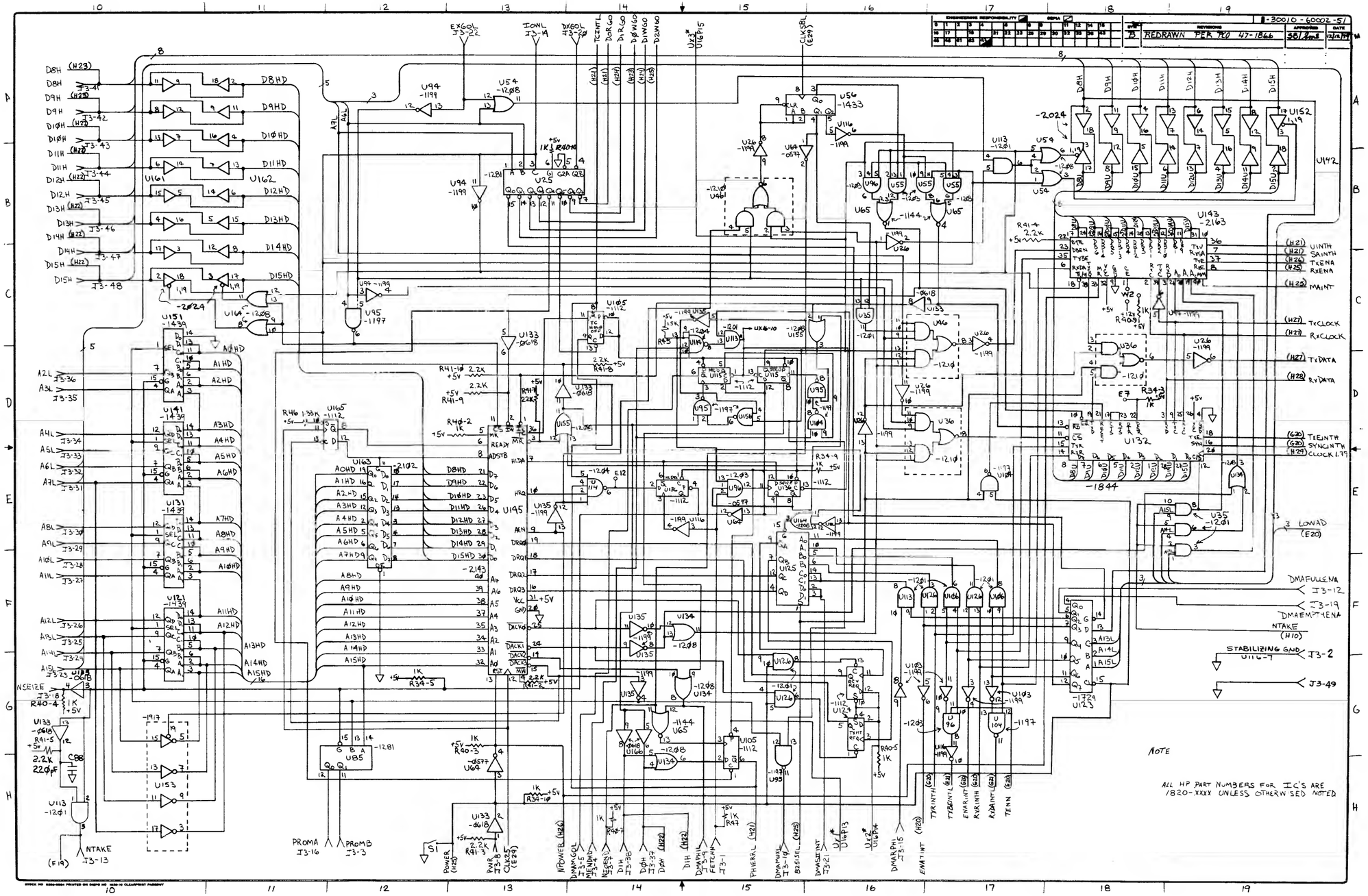

INP DCI PCA, 30010-60002, Sheet 1 of 4

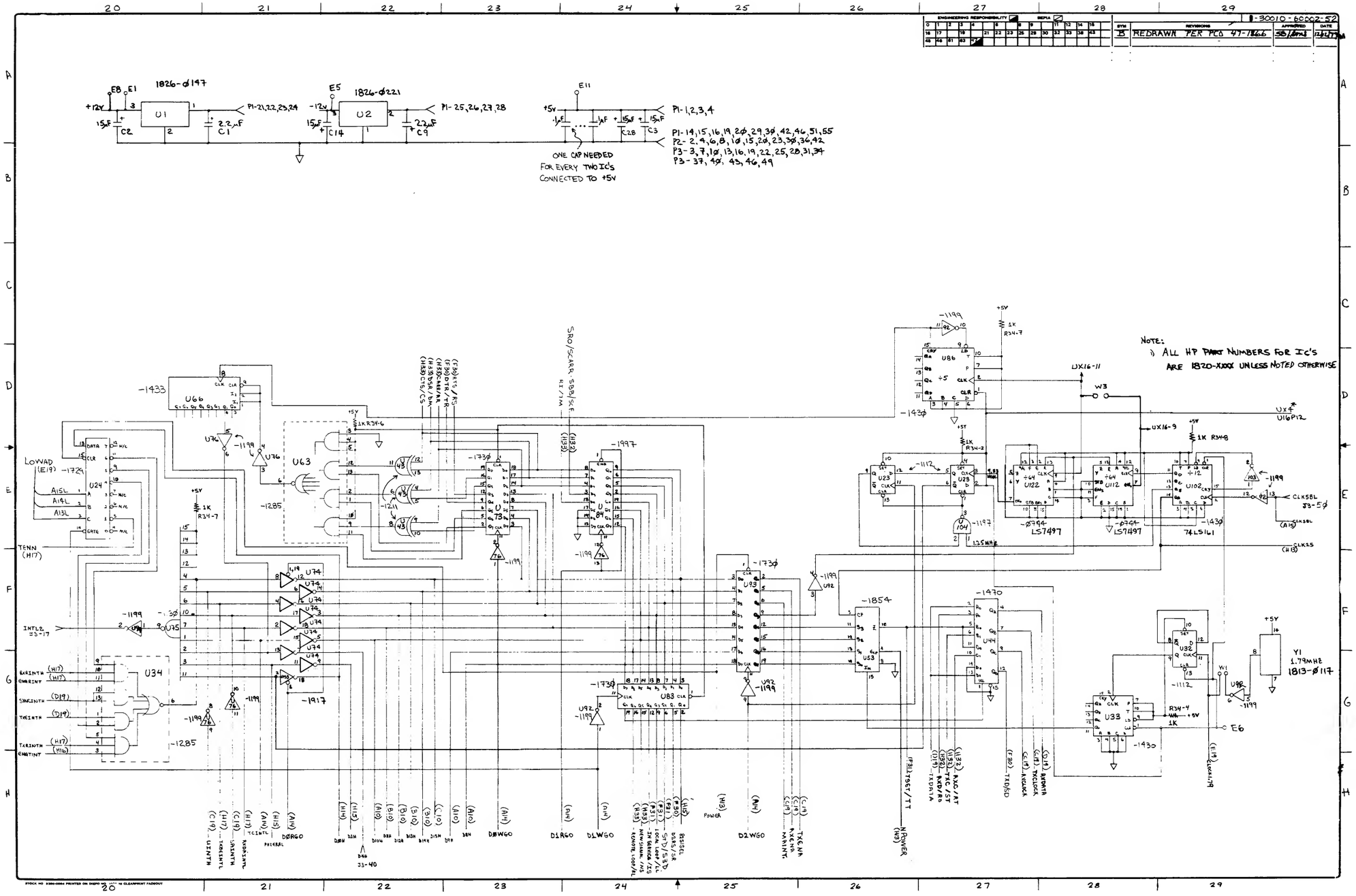
1826-0197
1826-0221
U1
U2
P1-21,22,23,24
P1-25,26,27,28
P1-1,2,3,4
P1-14,15,16,19,20,29,30,42,46,51,55
P2-2,4,6,8,10,15,20,23,30,36,42
P3-3,7,10,13,16,19,22,25,28,31,34
P3-37,40,43,46,49
ONE CAP NEEDED FOR EVERY TWO IC'S CONNECTED TO +5V
NOTE:
1) ALL HP PART NUMBERS FOR IC'S ARE 1820-XXXX UNLESS NOTED OTHERWISE
U66
U63
U24
U86
U23
U122
U112
U102
U73
U84
U93
U83
U53
U44
U32
U33
U34
U35
U76
U74
U92
U98
LS7497
74LS161
Y1
1.79MHZ
1813-0117
LOWVAD
TENN
INTL2
SRO/SCARR-SBB/SCF
CLKSBL
CLK25
POWER
NPOWER
TXD/SD
TXCLOCK
TXDATA
RXD/RD
RXC/RT
TXC/ST
RXCLACK
RXDATA

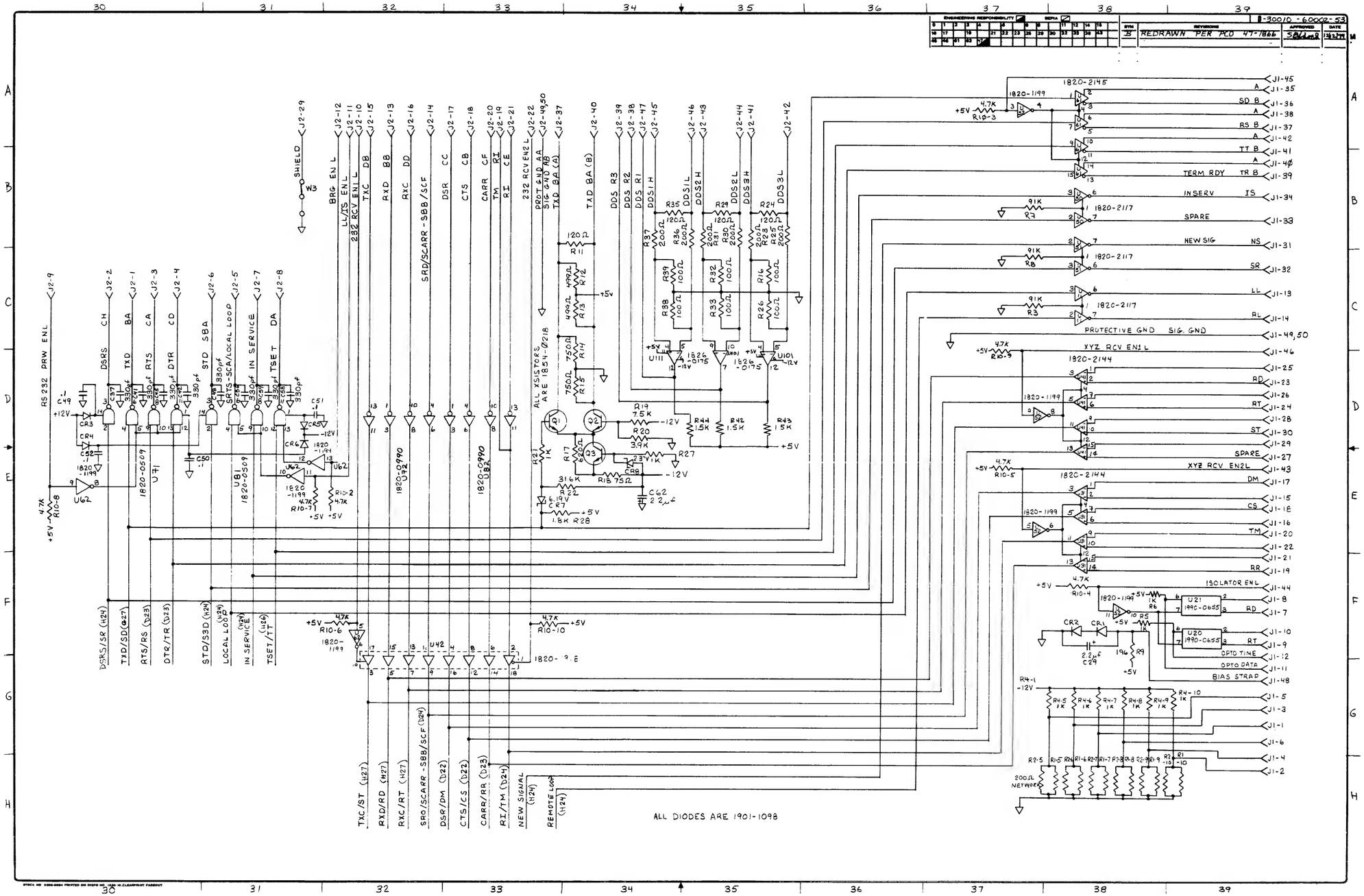

INP DCI PCA, 30010-60002, Sheet 3 of 4

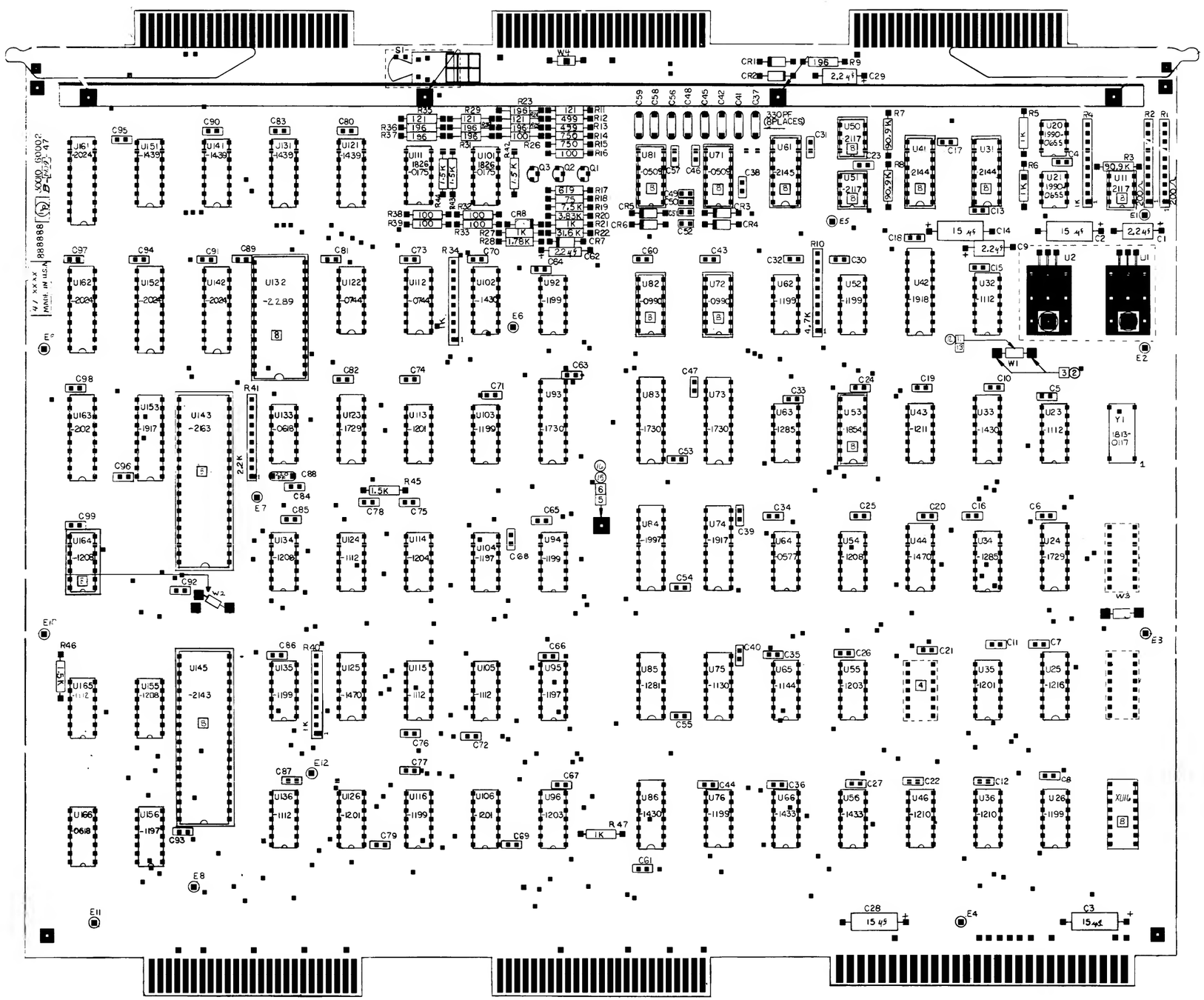

NOTES

1. UNLESS OTHERWISE SPECIFIED:
ALL RESISTANCE IN OHMS
ALL RESISTORS 1/8W, 1%
ALL CAPACITANCE IN MICROFARADS
ALL CAPACITORS ARE .1 UF

ALL IC'S ARE 1820-

INP DCI PCA, 30010-60002, Sheet 4 of 4

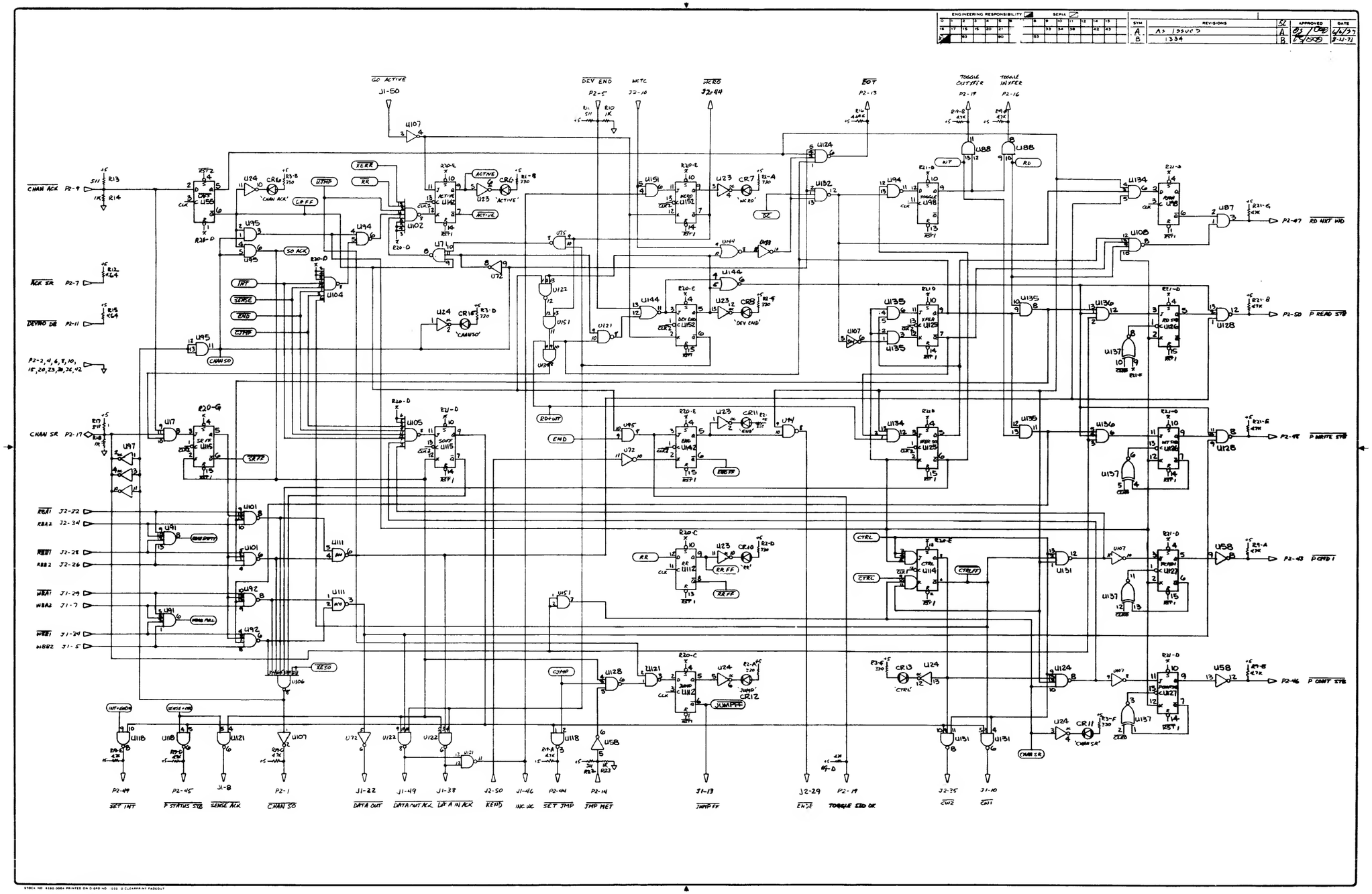

Selector Channel Control PCA, 30030-60003, Sheet 1 of 3

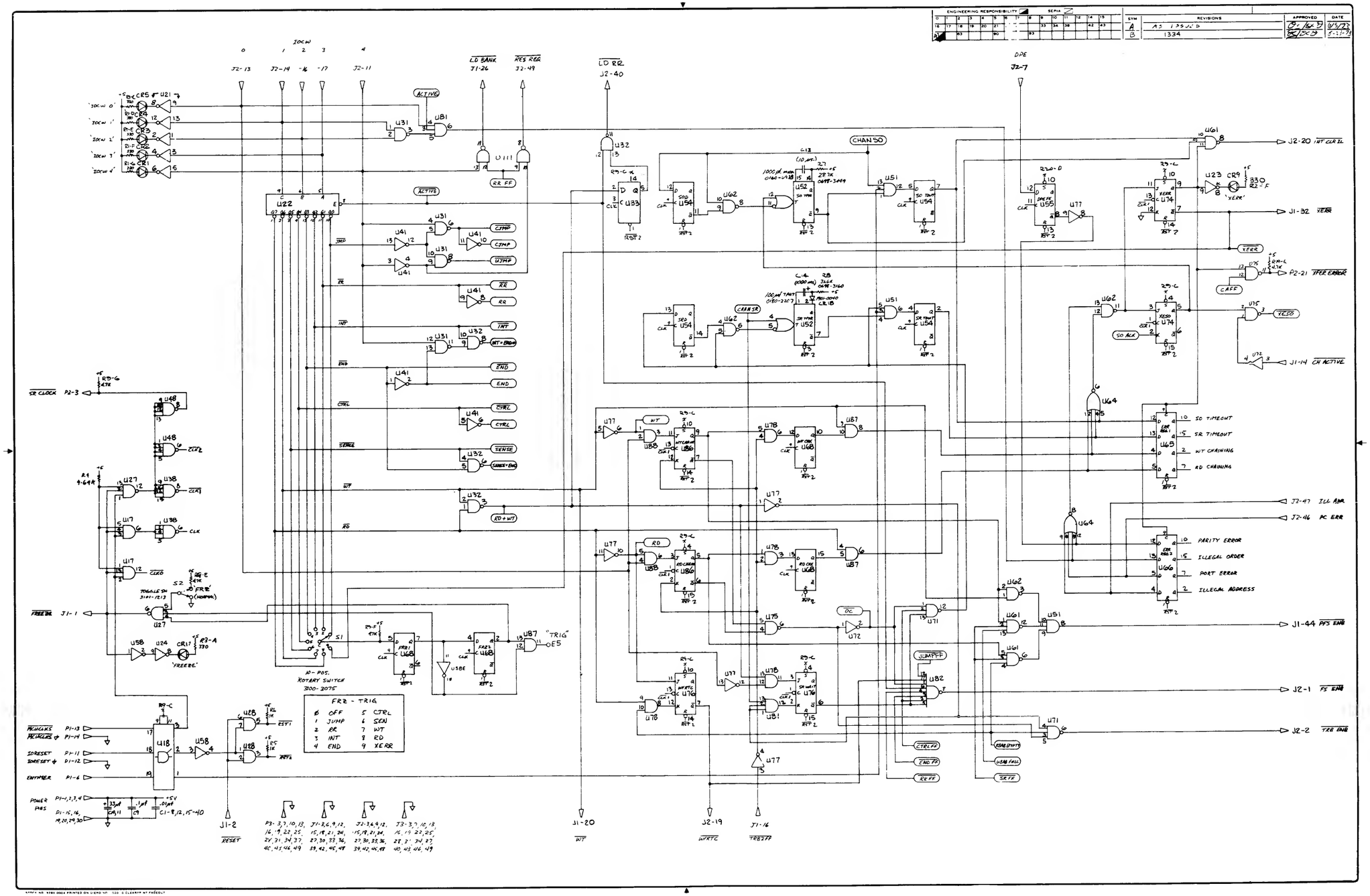

Selector Channel Control PCA, 30030-60003, Sheet 2 of 3

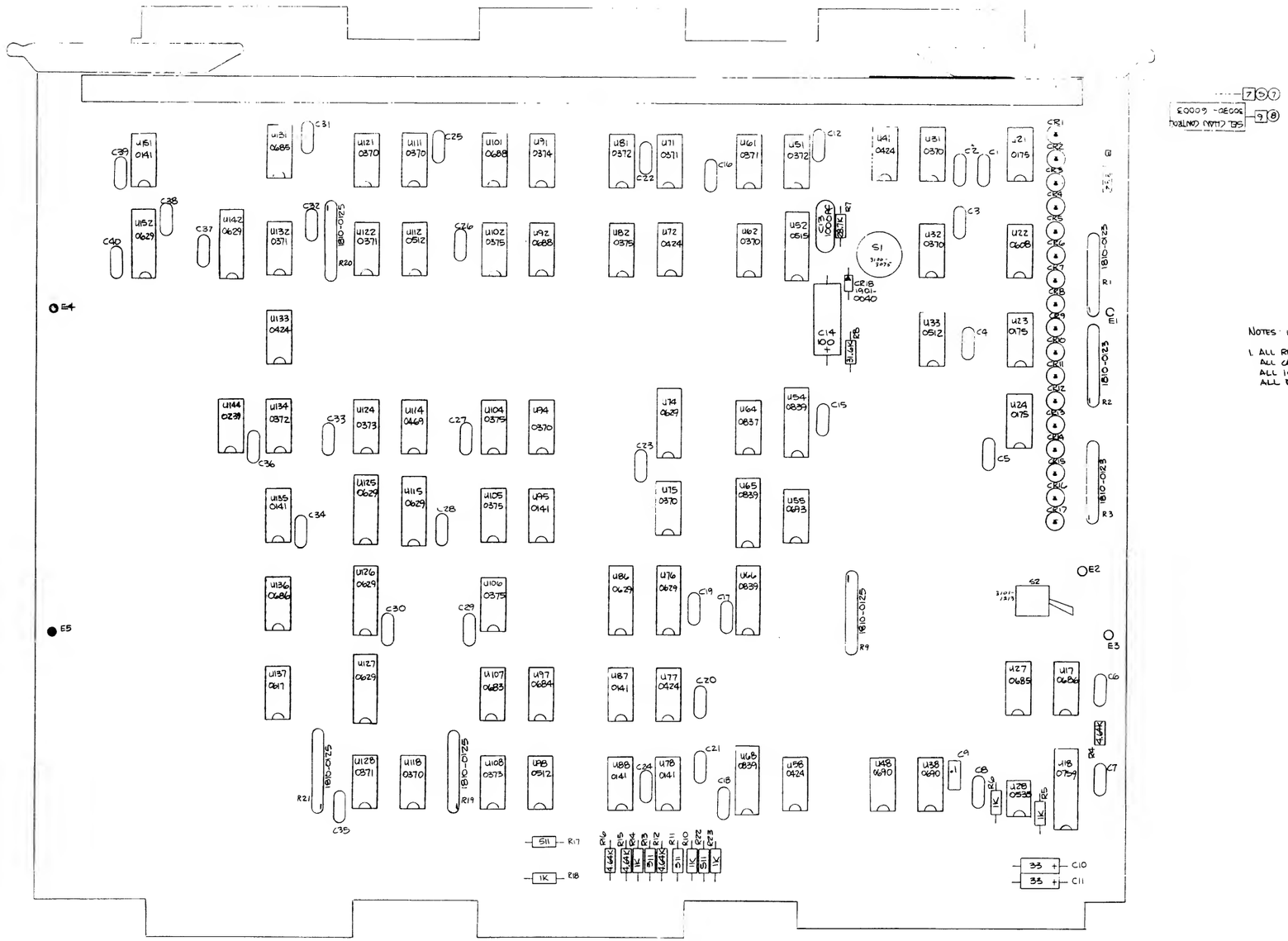

Selector Channel Control PCA, 30030-60003, Sheet 3 of 3

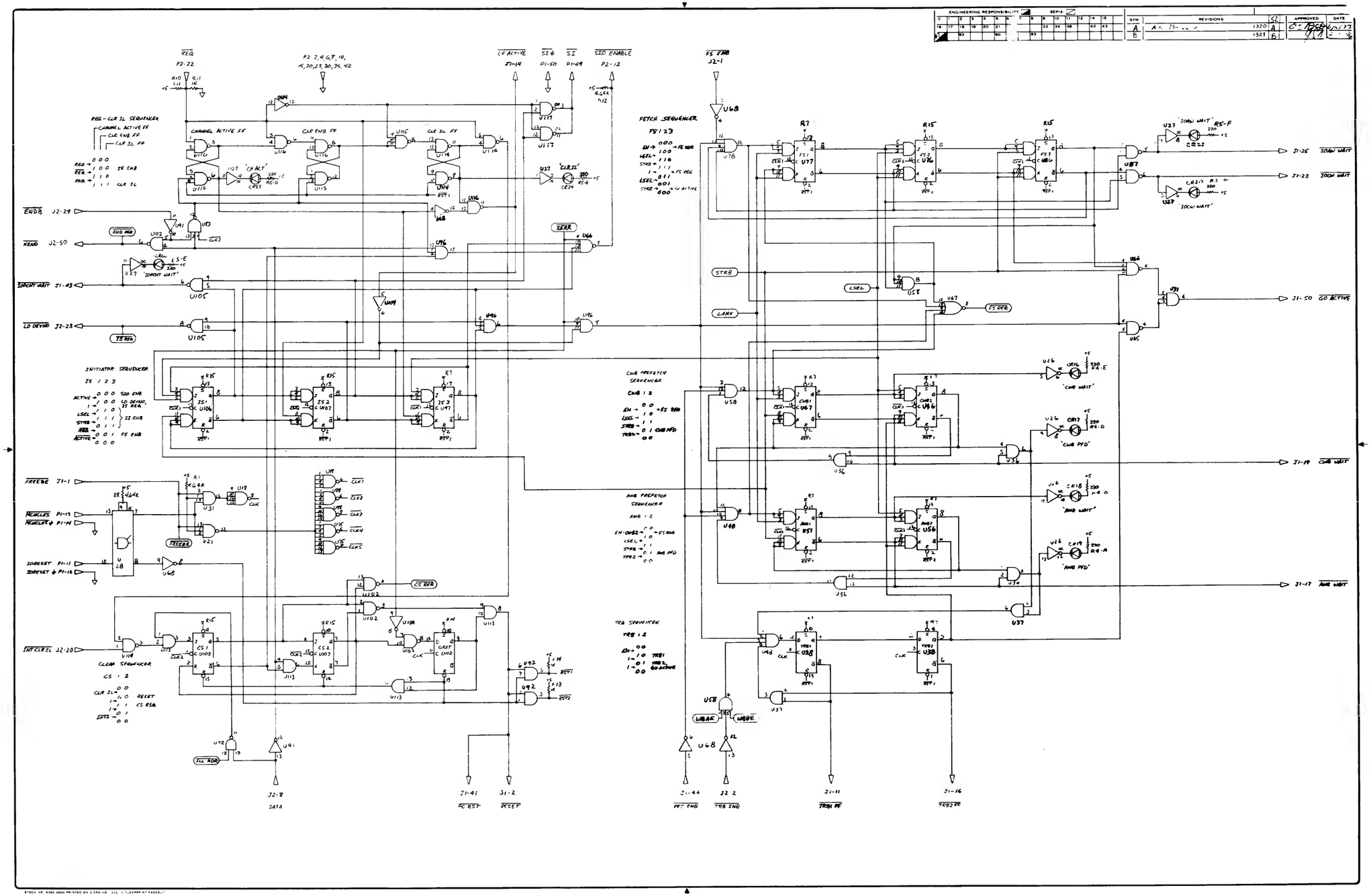

Selector Channel Sequencer, 30030-60011, Sheet 1 of 3

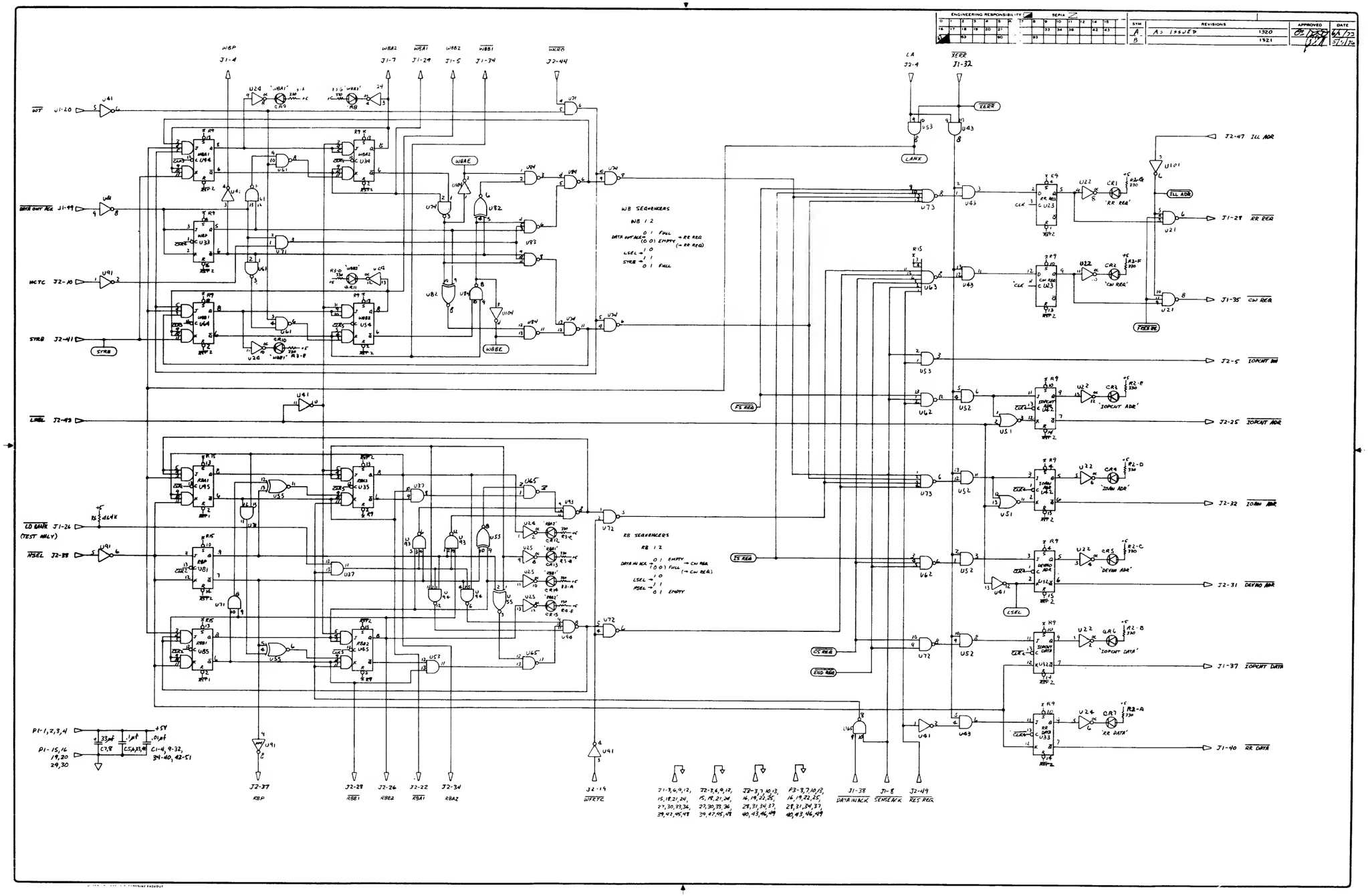

Selector Channel Sequencer, 30030-60011, Sheet 2 of 3

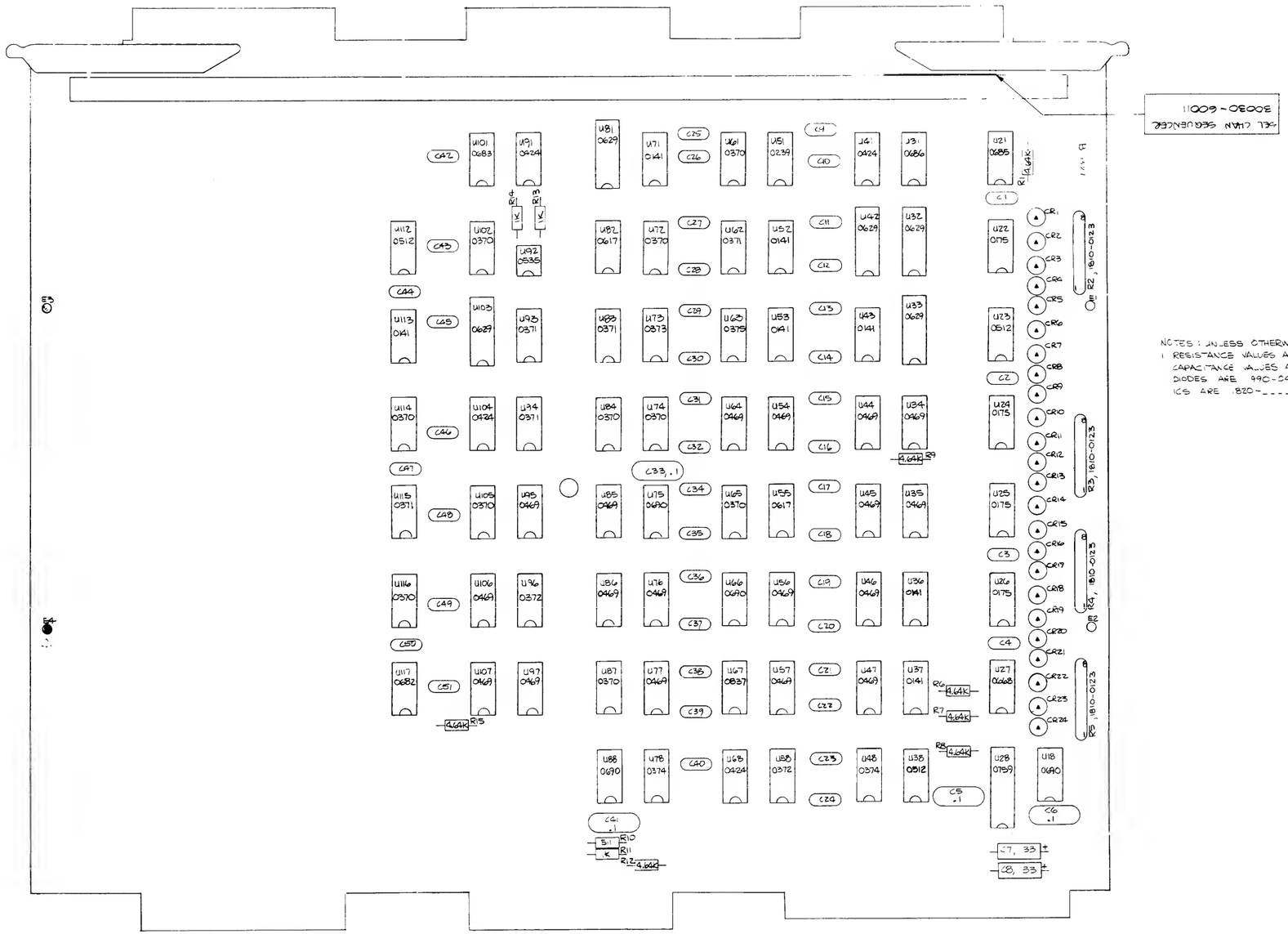

Selector Channel Sequencer, 30030-60011, Sheet 3 of 3

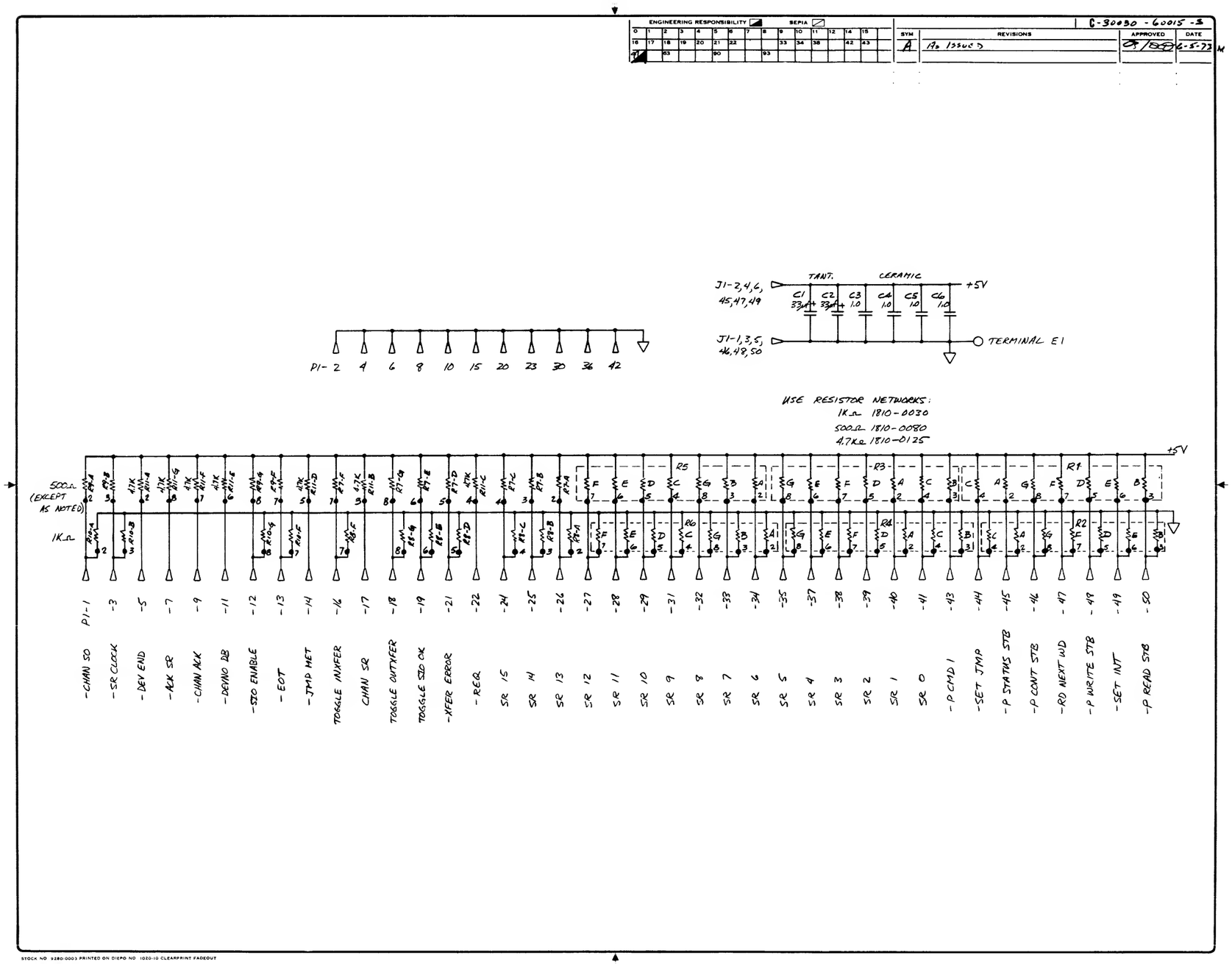

Selector Channel Bus Terminator, 30030-60015, Sheet 1 of 2

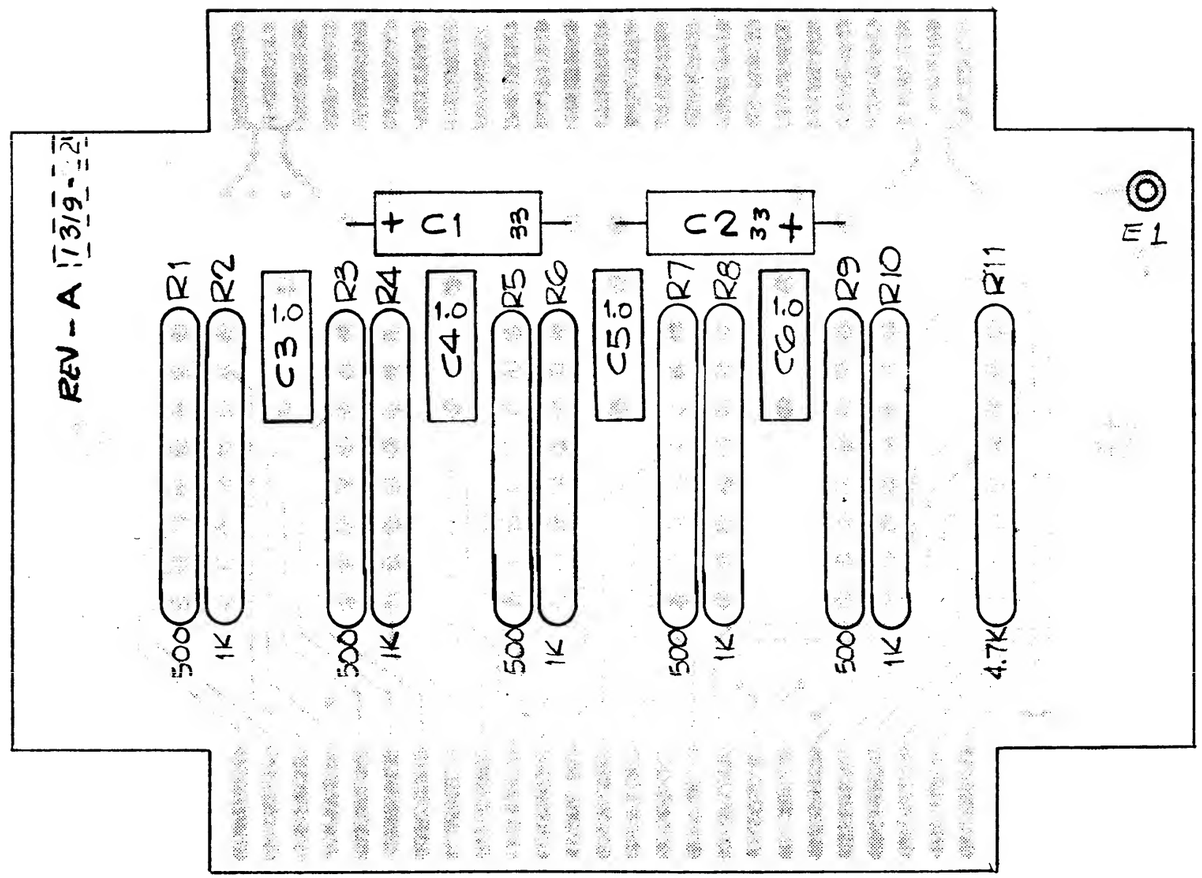

NOTES :

1. UNLESS OTHERWISE NOTED :
   ALL RESISTANCE IN OHMS
   ALL CAPACITANCE IN MICROFARADS

Selector Channel Bus Terminator, 30030-60015, Sheet 2 of 2

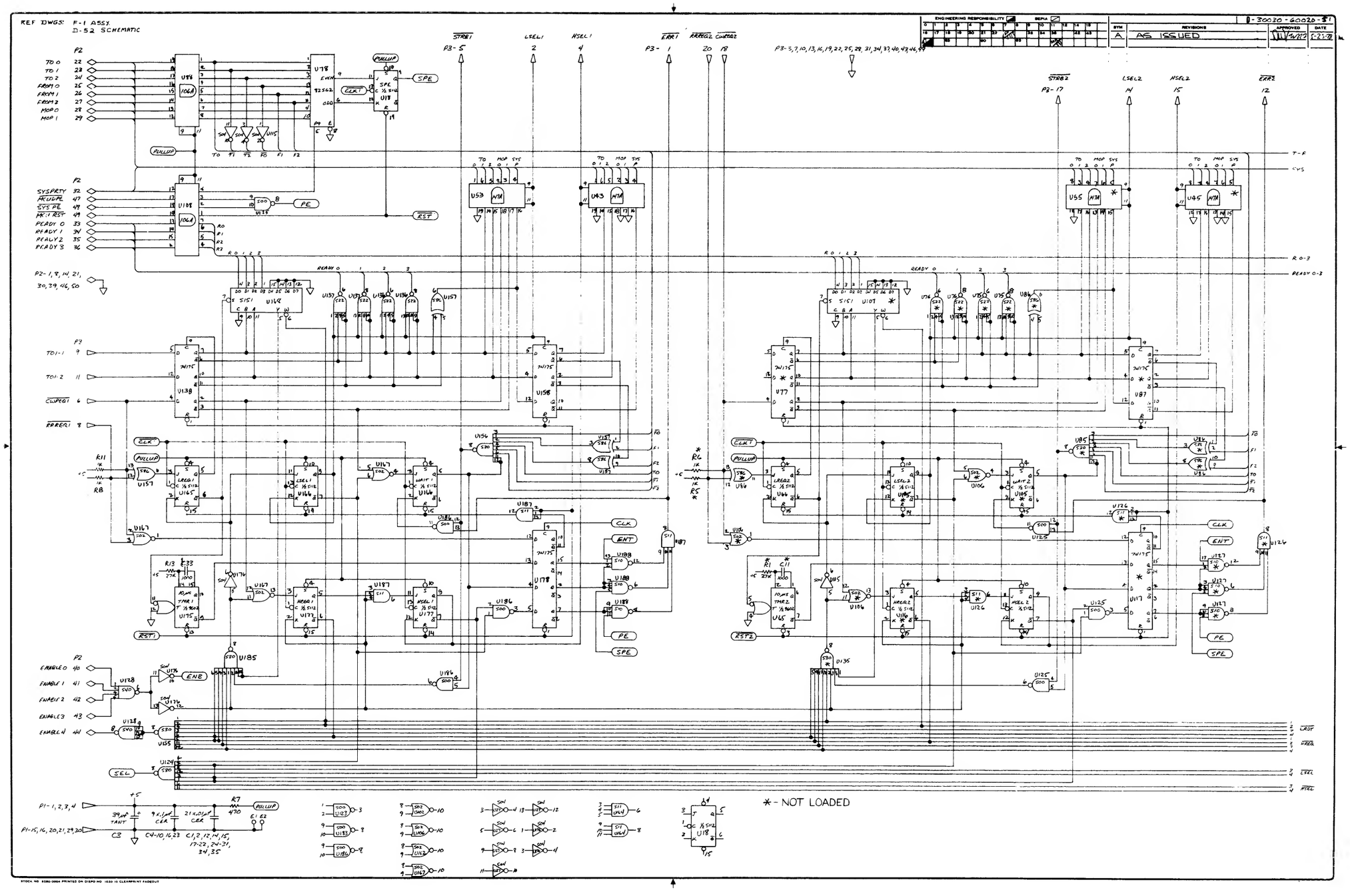

Port Controller, 30030-60020, Sheet 1 of 3

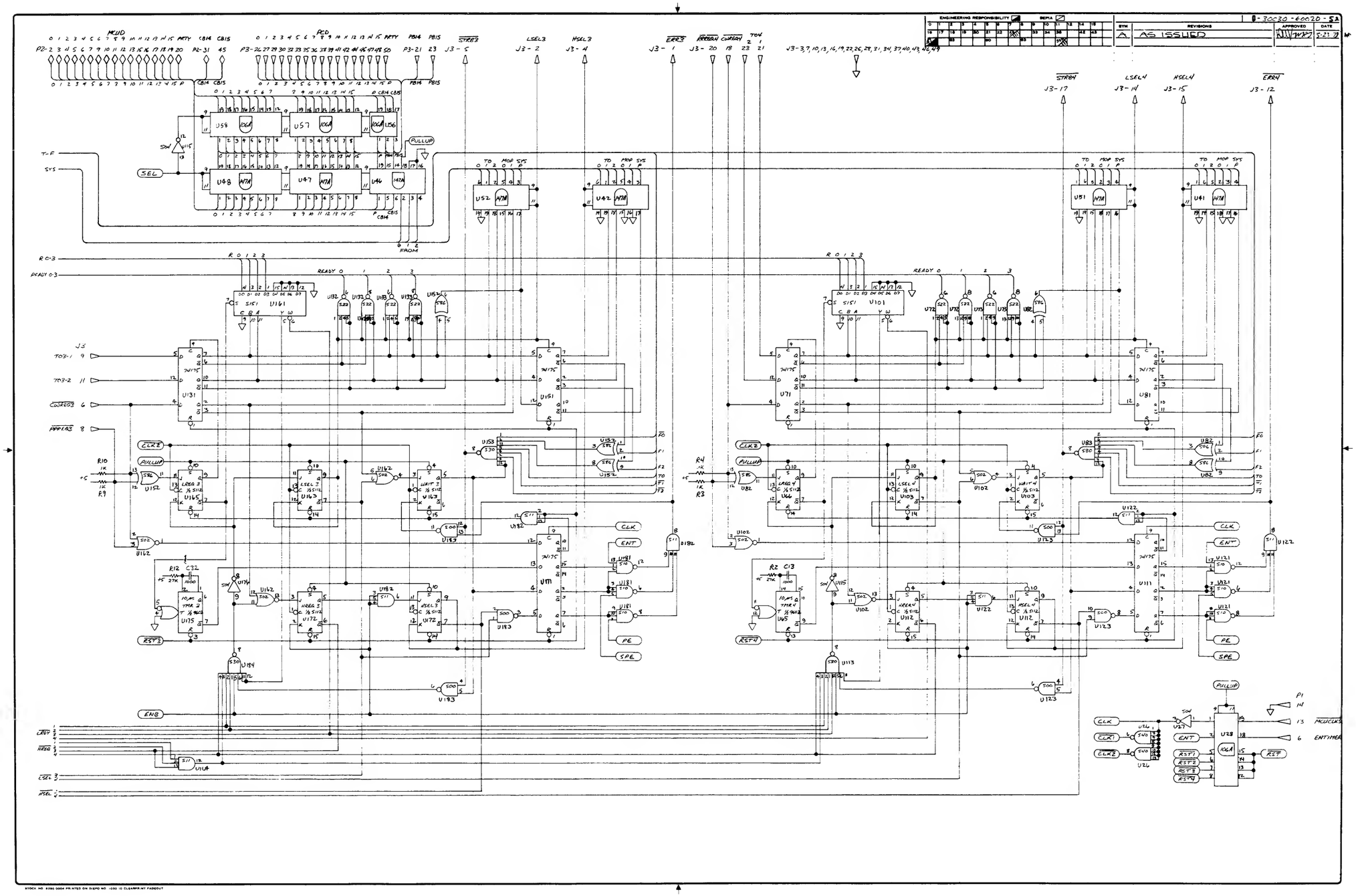

Port Controller, 30030-60020, Sheet 2 of 3

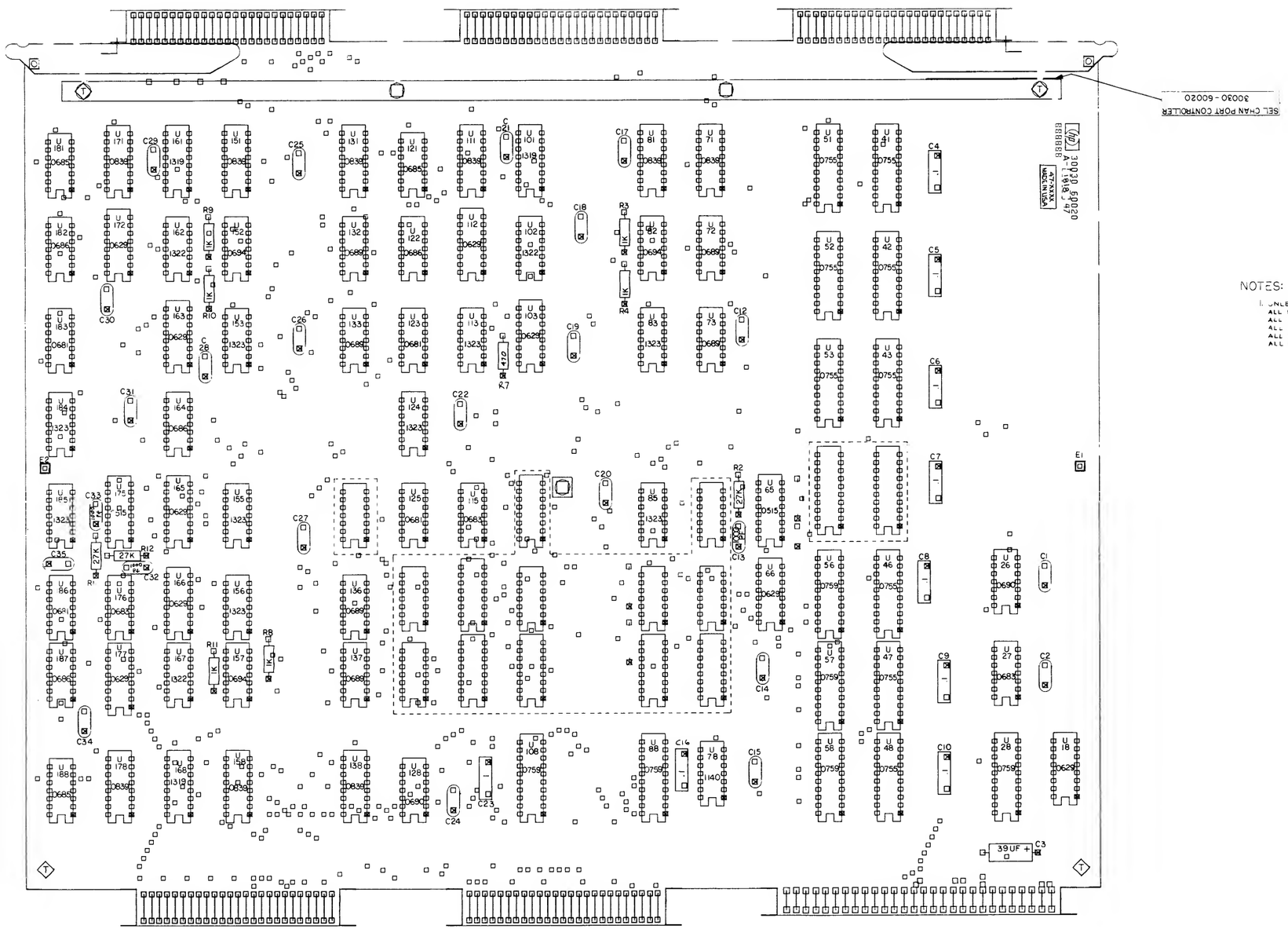

Port Controller, 30030-60020, Sheet 3 of 3

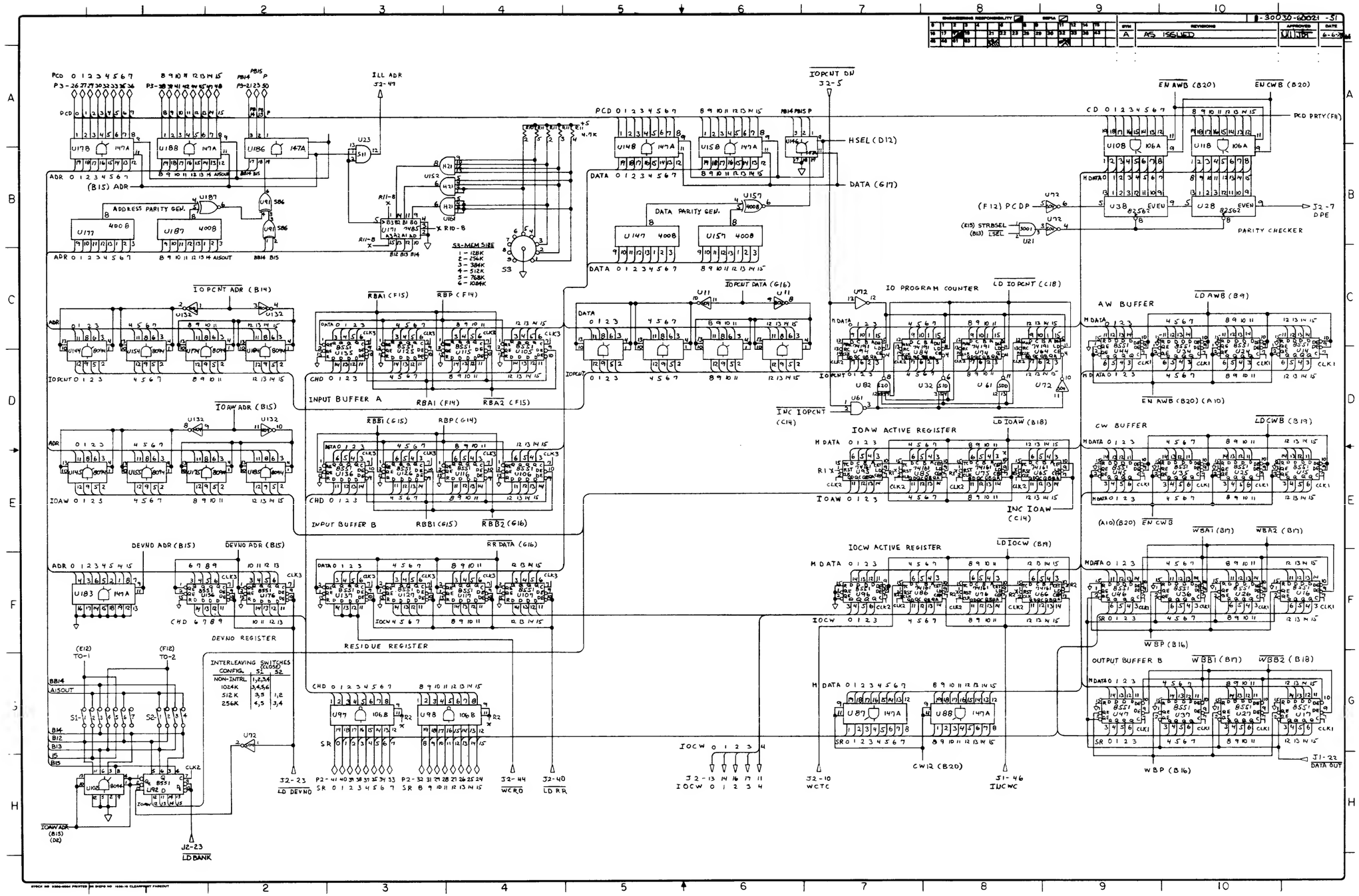

Selector Channel Register, 30030-60021, Sheet 1 of 3

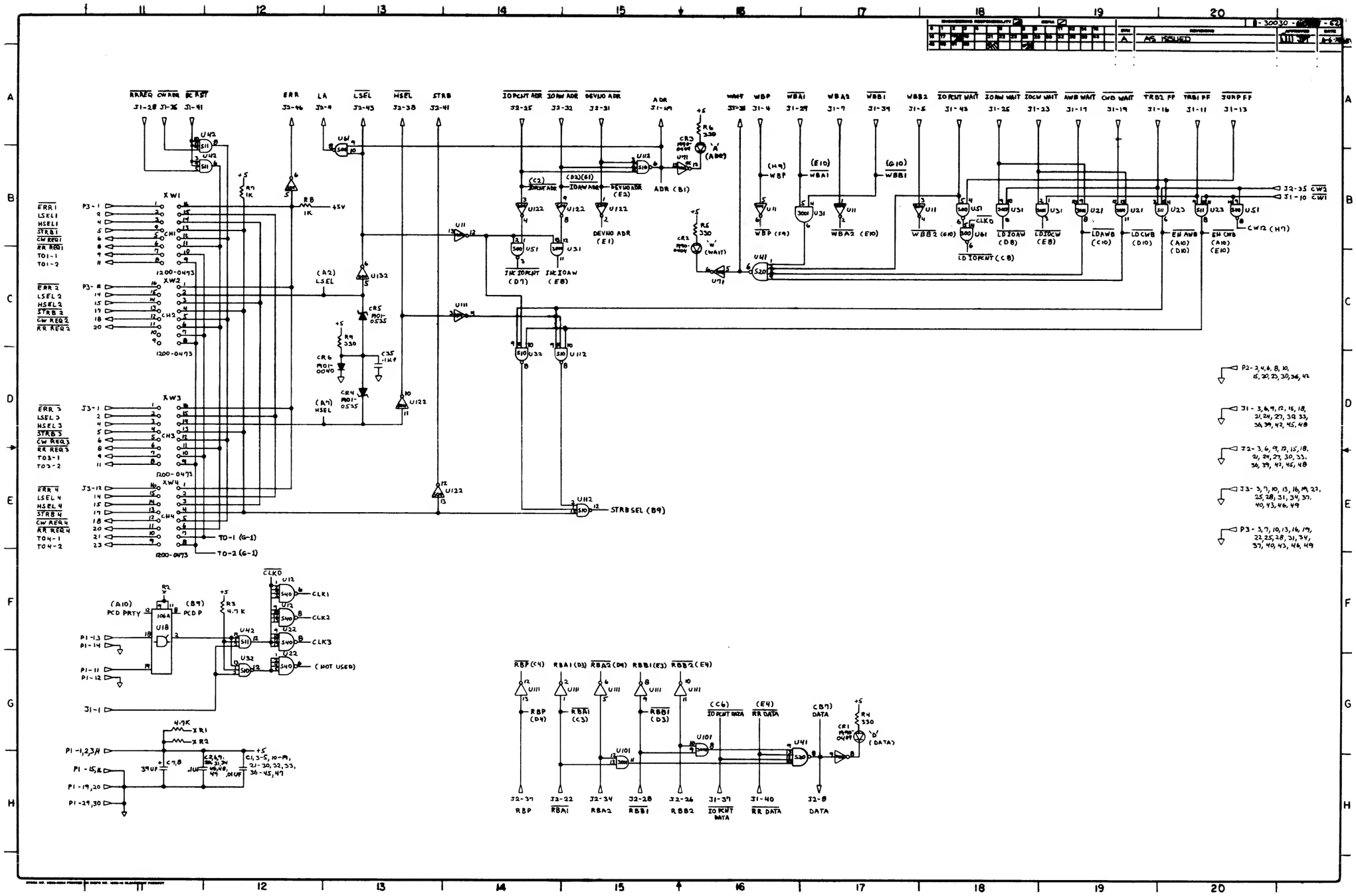

Selector Channel Register, 30030-60021, Sheet 2 of 3

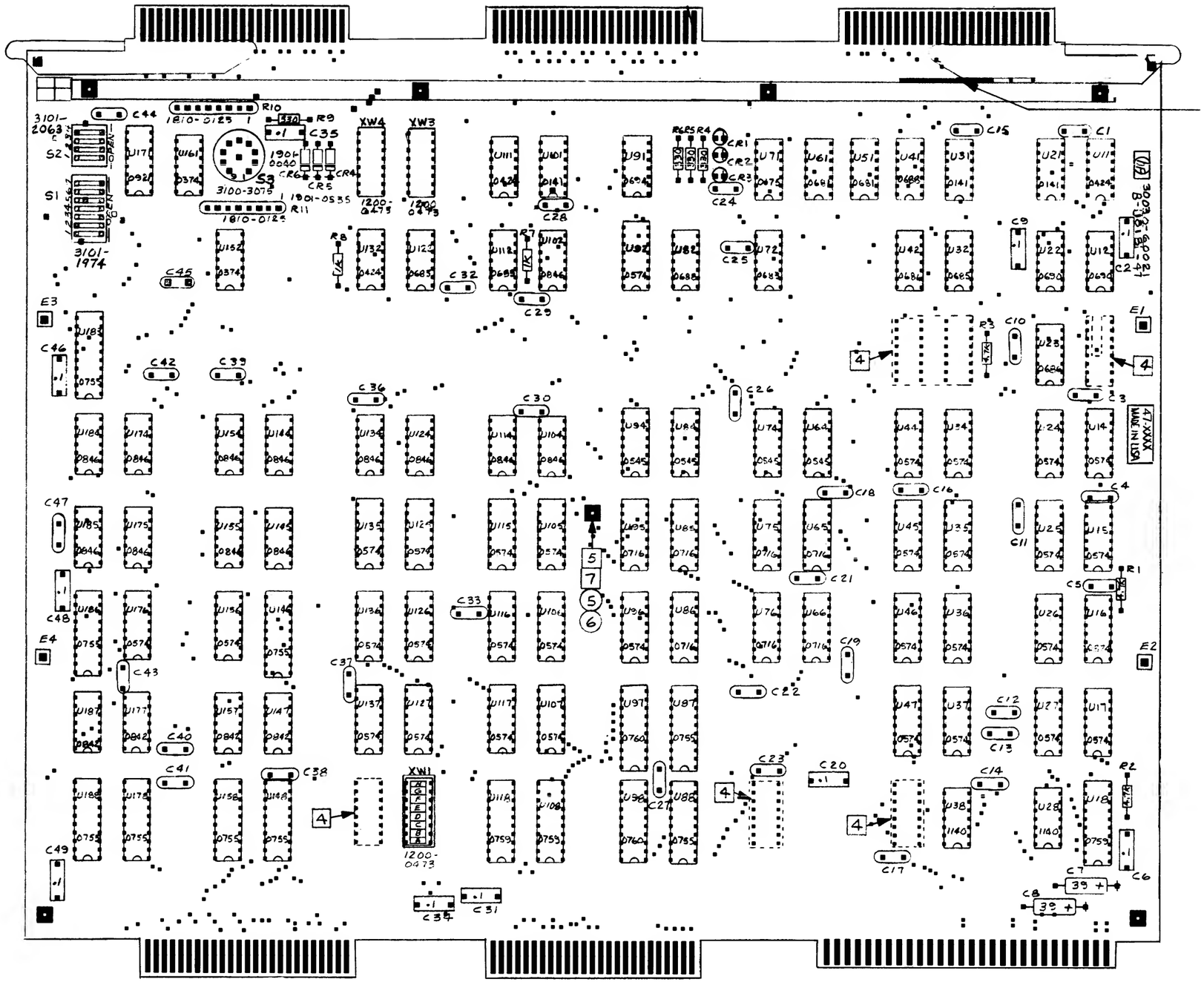

Selector Channel Register, 30030-60021, Sheet 3 of 3

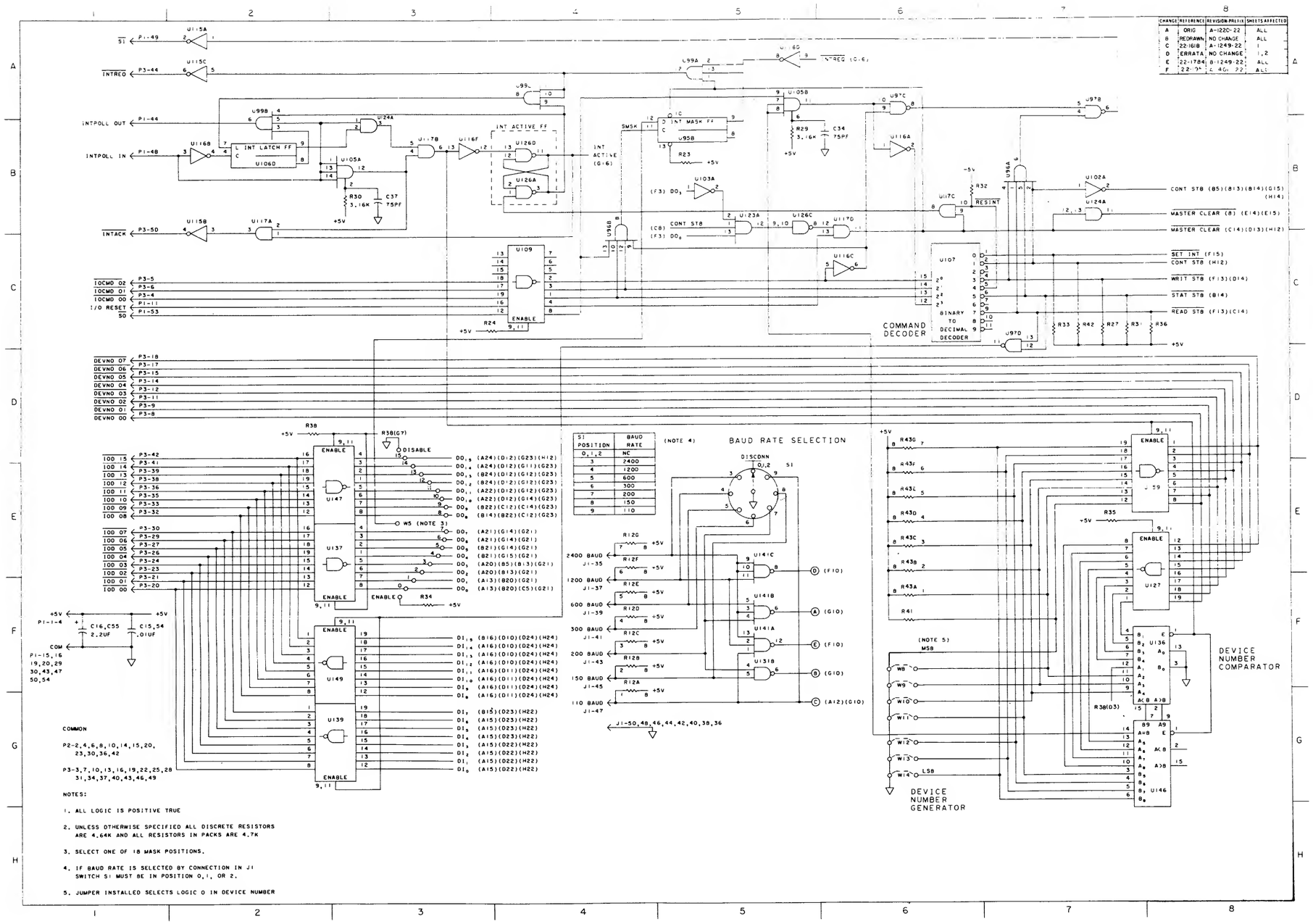

CHANGE	REFERENCE	REVISION PRLI13	SHEETS AFFECTED
A	ORIG	A-1220-22	ALL
B	REDRAWN	NO CHANGE	ALL
C	22-1618	A-1249-22	1
D	ERRATA	NO CHANGE	1,2
E	22-1784	B-1249-22	ALL
F	22-[illegible]	[illegible]	ALL

32421A ONLY System Clock PCA, 30031-60001, Sheet 1 of 4

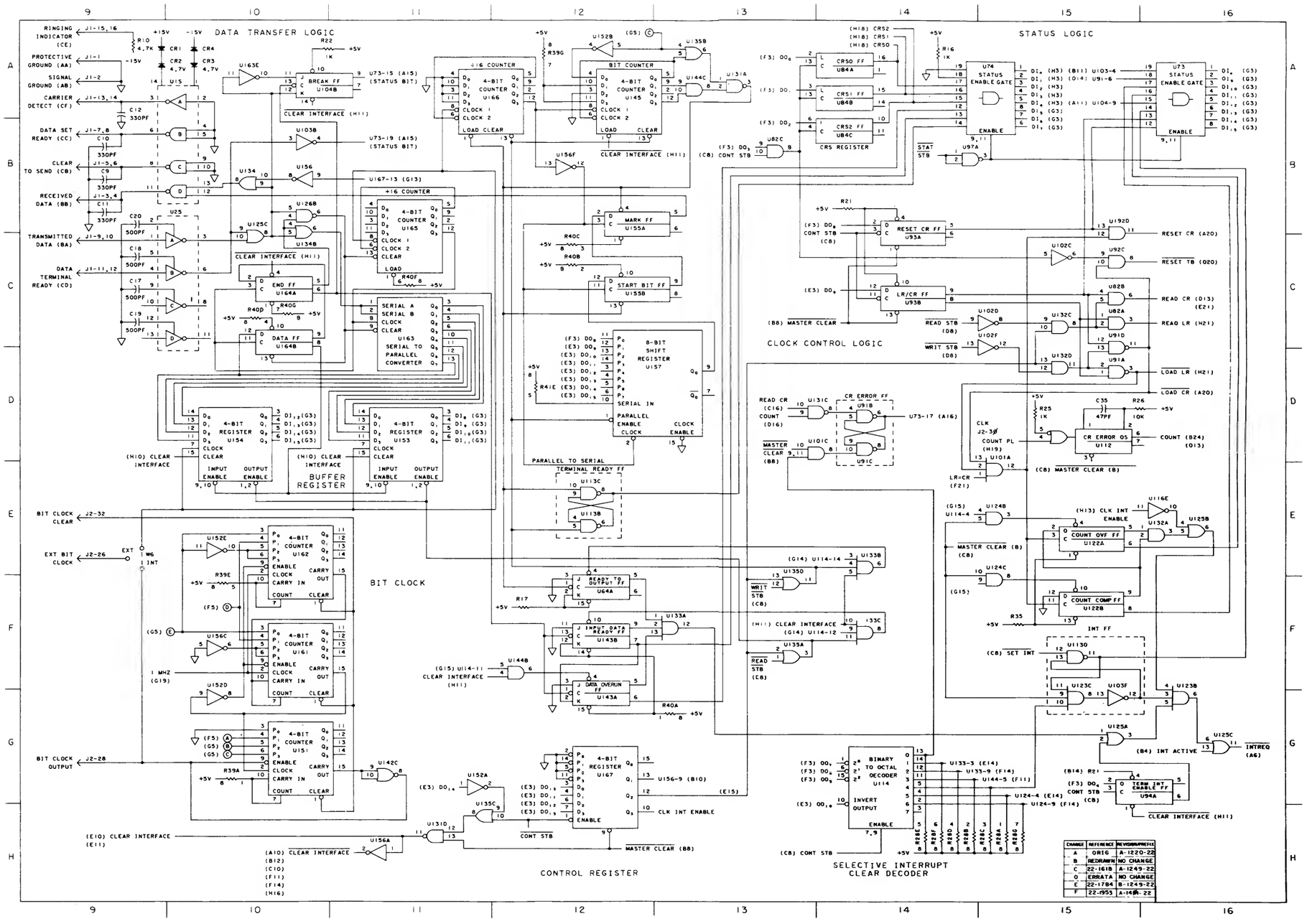

32421A ONLY System Clock PCA, 30031-60001, Sheet 2 of 4

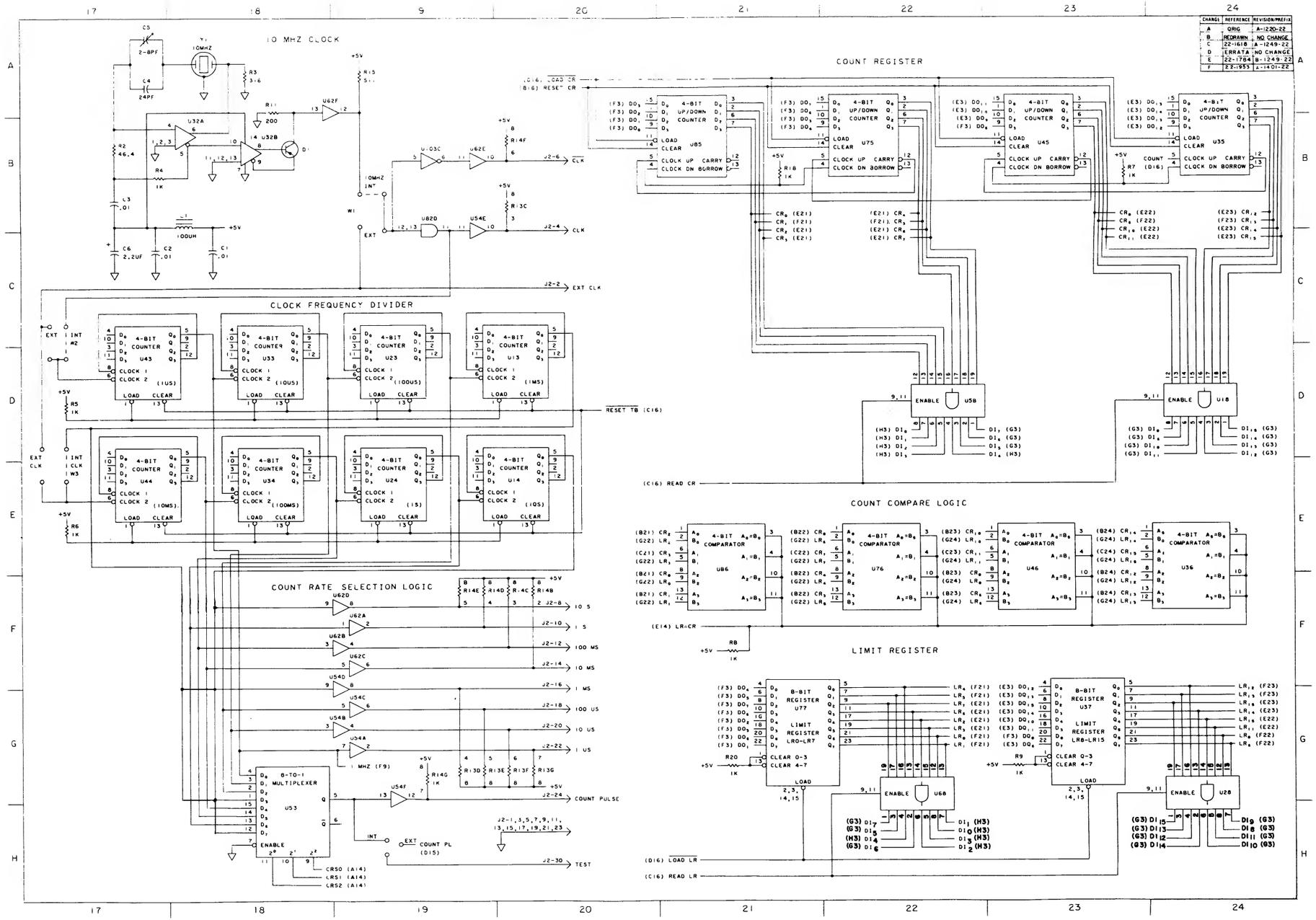

CHANGE	REFERENCE	REVISION/PREFIX
A	ORIG	A-1220-22
B	REDRAWN	NO CHANGE
C	22-1618	A-1249-22
D	ERRATA	NO CHANGE
E	22-1784	B-1249-22
F	22-1955	A-1401-22

32421A ONLY System Clock PCA, 30031-60001, Sheet 3 of 4

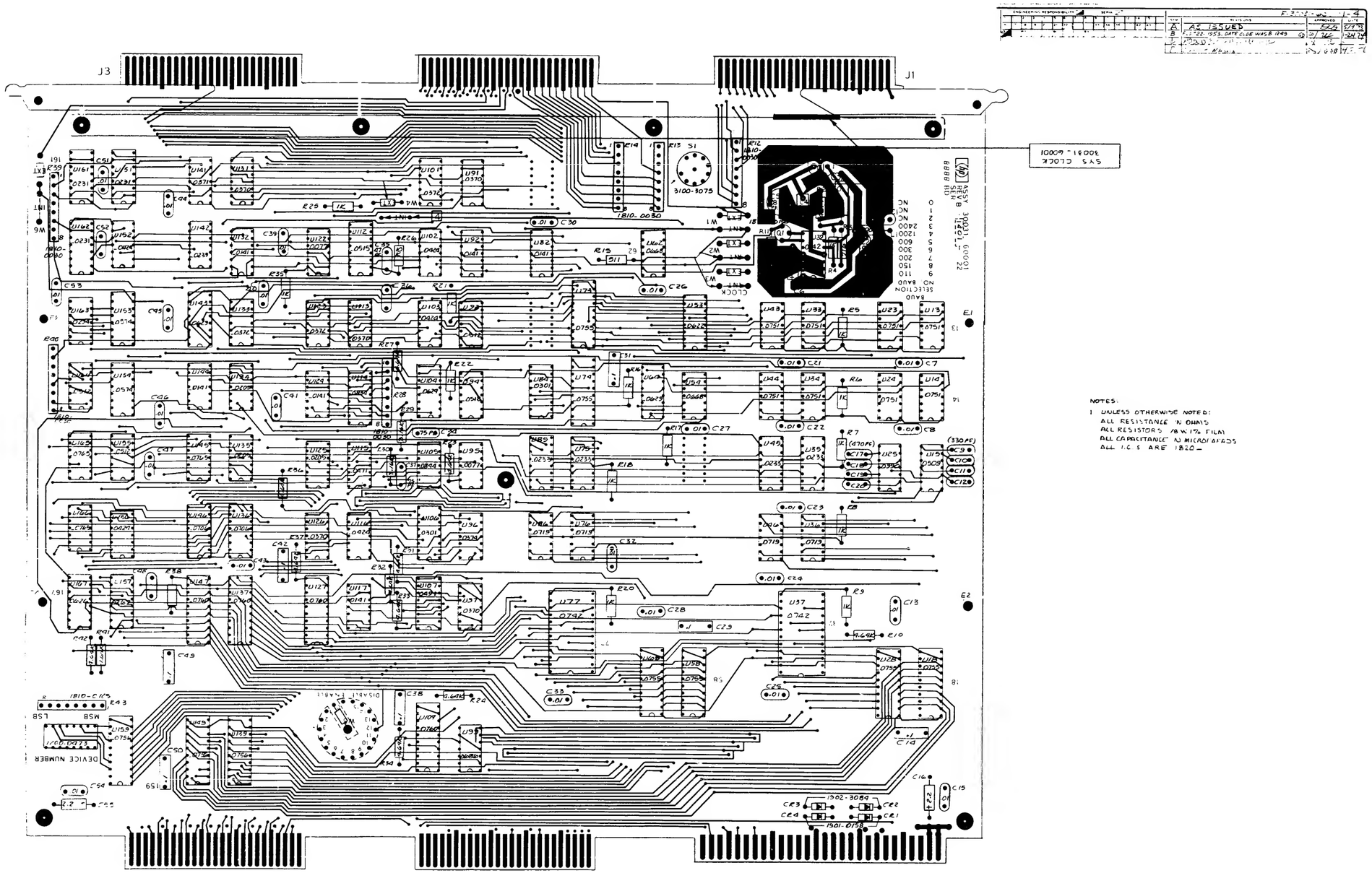

32421A ONLY System Clock PCA, 30031-60001, Sheet 4 of 4

CHANGE	REFERENCE	REV/DIR/PREFIS	SHEETS AFFECTED
A	ORIG	A-1205-22	ALL
B	REDRAWN	NO CHANGE	ALL
C	PPC-A	A-1225-22	ALL
D	PC-22-922	B-1251-21	ALL
E	ERRATA	NO CHANGE	ALL
F	22-1804	C-1251-22	ALL

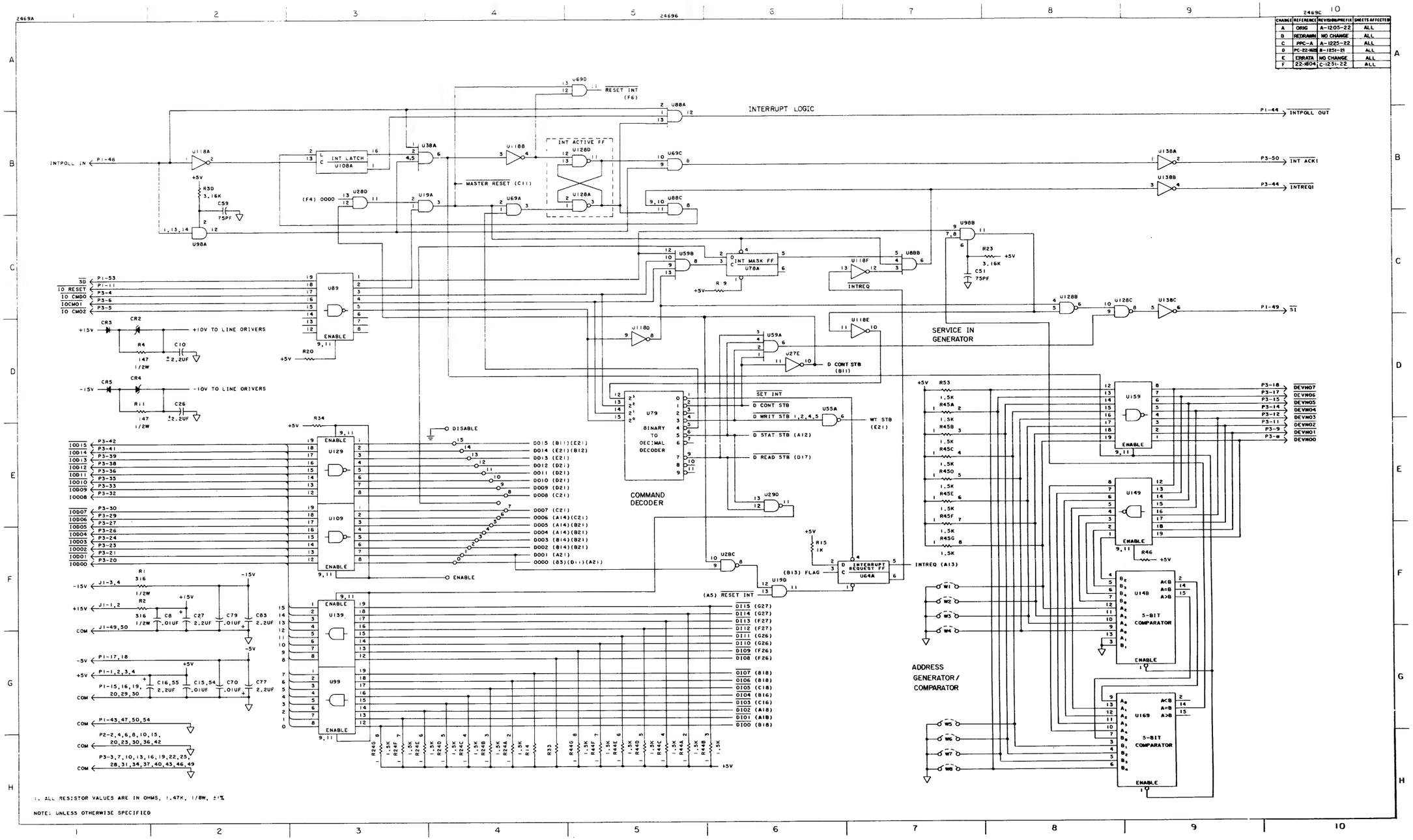

1. ALL RESISTOR VALUES ARE IN OHMS, 1.47K, 1/8W, ±1%

NOTE: UNLESS OTHERWISE SPECIFIED

Terminal Data Interface PCA, 30032-60001, Sheet 1 of 5

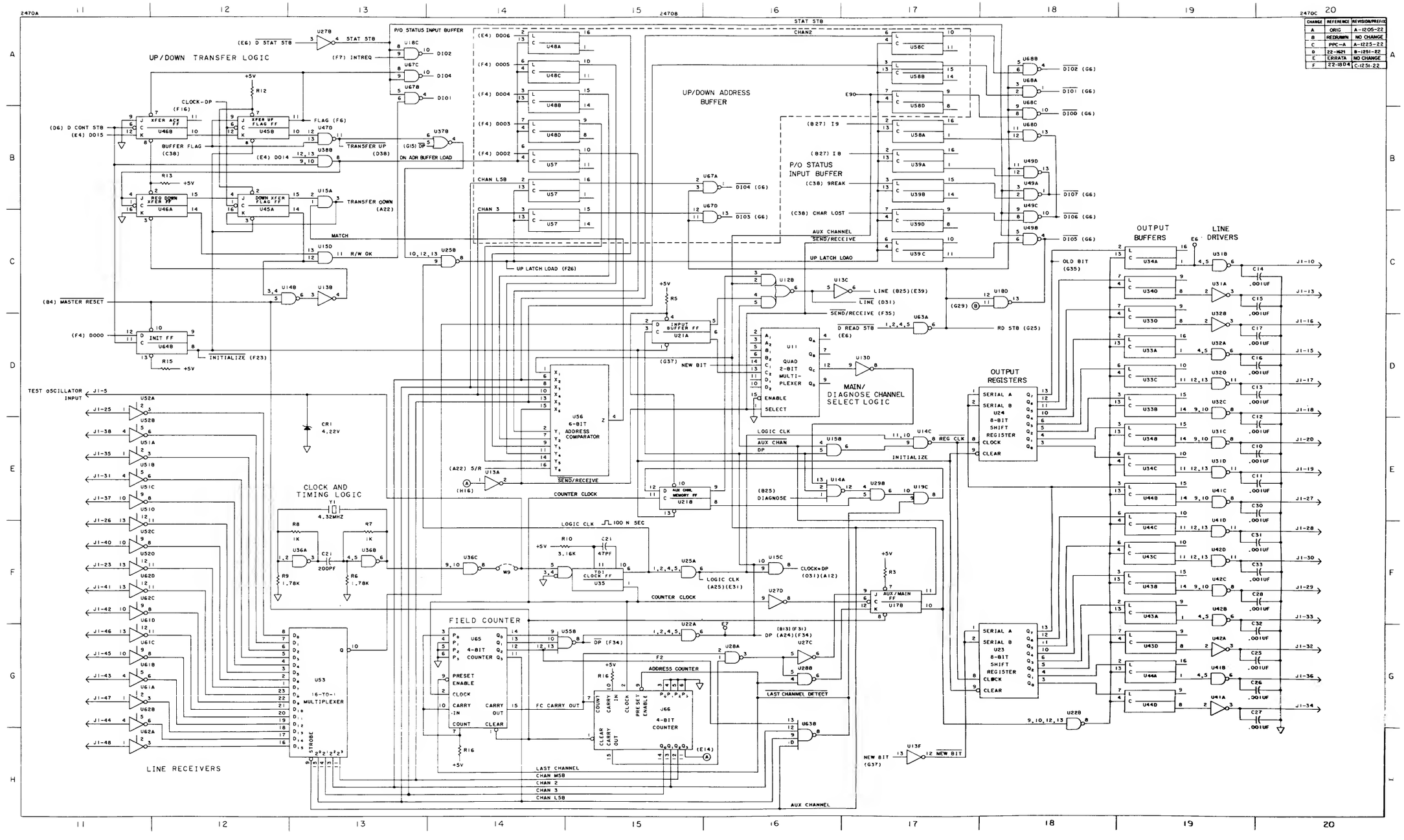

CHANGE	REFERENCE	REVISION/PREFIX
A	ORIG	A-1205-22
B	REDRAWN	NO CHANGE
C	PPC-A	A-1225-22
D	22-1621	B-1251-22
E	ERRATA	NO CHANGE
F	22-1804	C-1251-22

Terminal Data Interface PCA, 30032-60001, Sheet 2 of 5

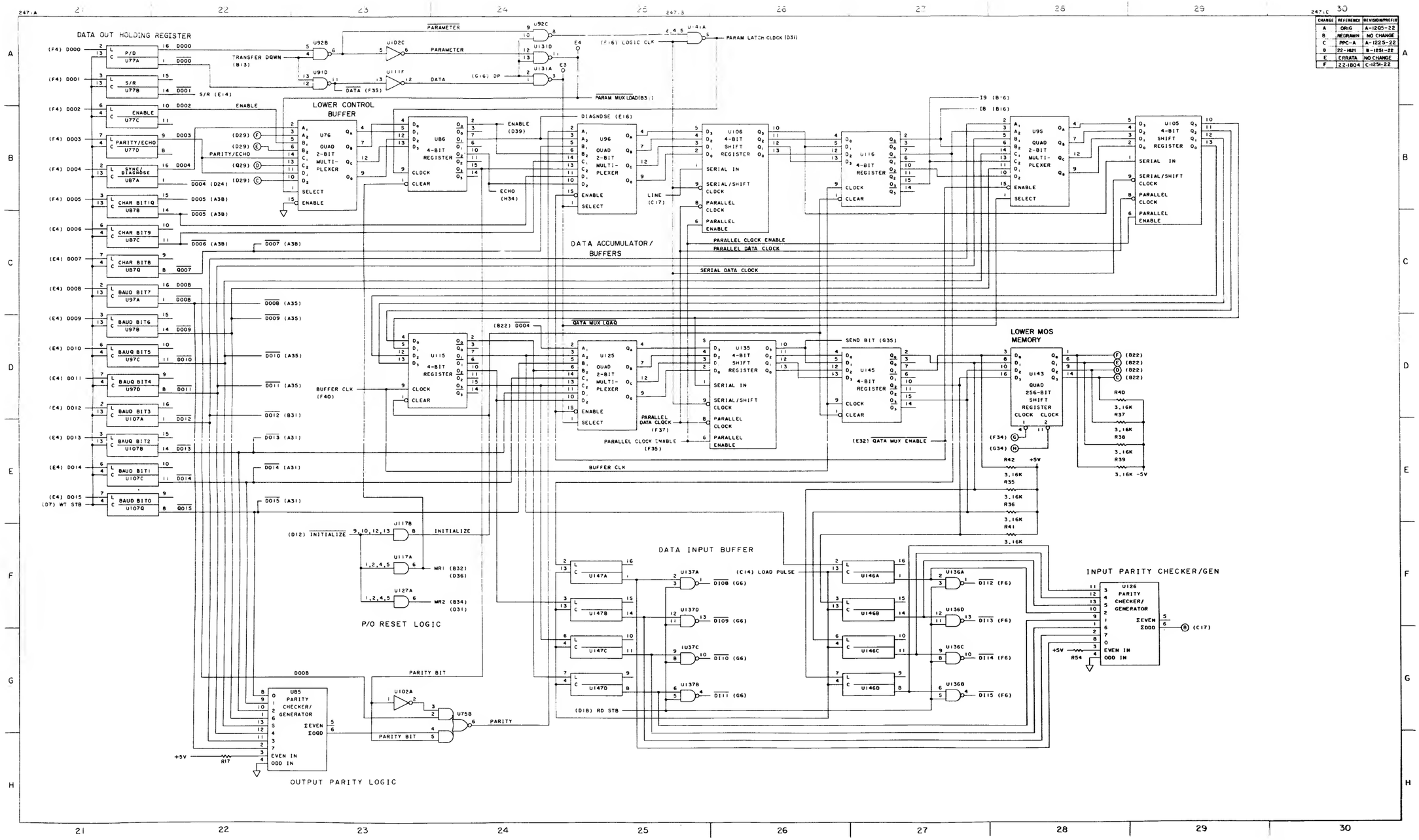

CHANGE	REFERENCE	REVISION/PREFIX
A	ORIG	A-1205-22
B	REDRAWN	NO CHANGE
C	PPC-A	A-1225-22
D	22-1821	B-1251-22
E	ERRATA	NO CHANGE
F	22-1804	C-1254-22

Terminal Data Interface PCA, 30032-60001, Sheet 3 of 5

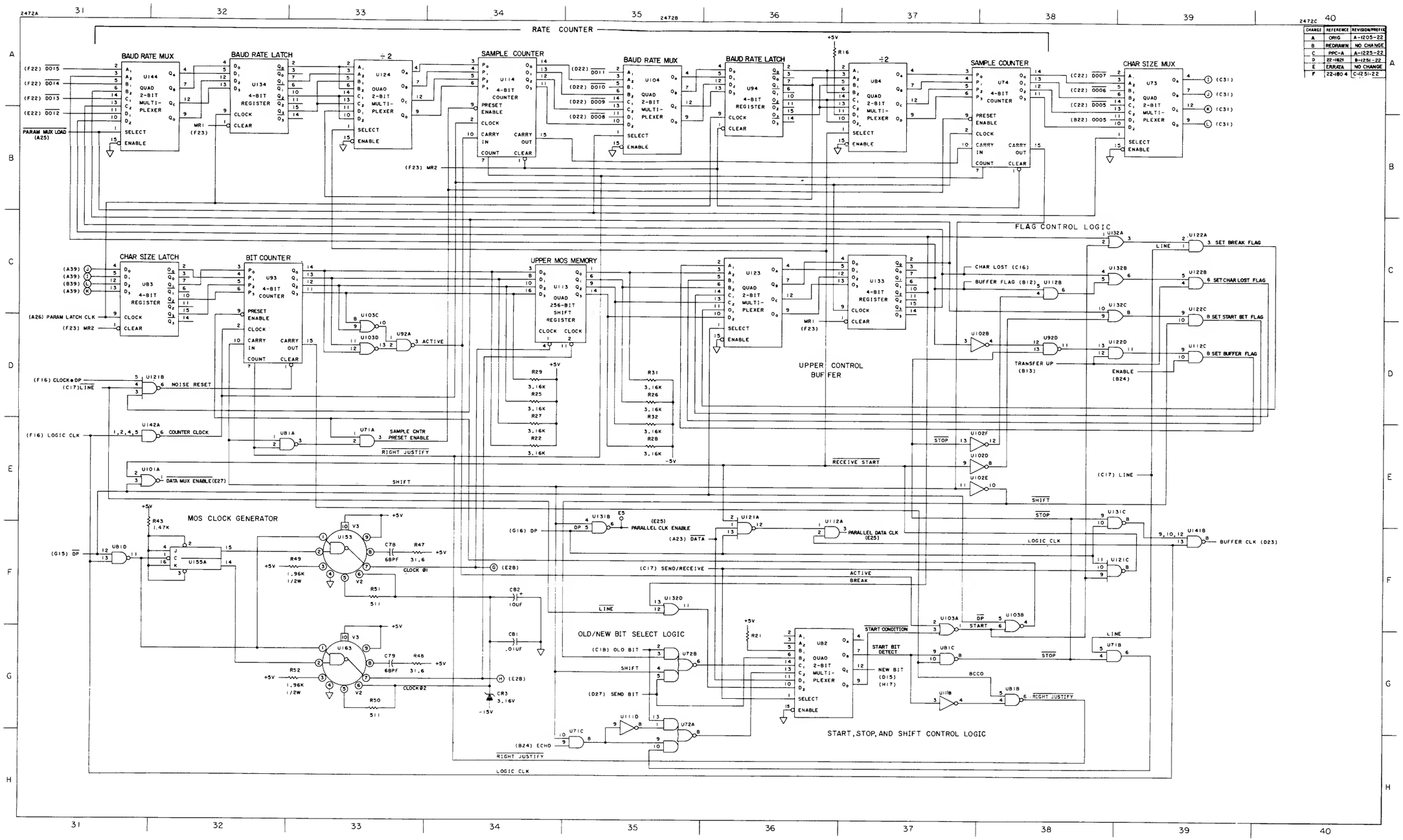

CHANGE	REFERENCE	REVISION/PREFIX
A	ORIG	A-1205-22
B	REDRAWN	NO CHANGE
C	PPC-A	A-1225-22
D	22-1821	B-1251-22
E	ERRATA	NO CHANGE
F	22-1804	C-1251-22

Terminal Data Interface PCA, 30032-60001, Sheet 4 of 5

SYM	REVISIONS	APPROVED	DATE
A	A1 ISSUED		
B	ECO NOTE #7		
C	ADDED 3037DR 601 & 3048		

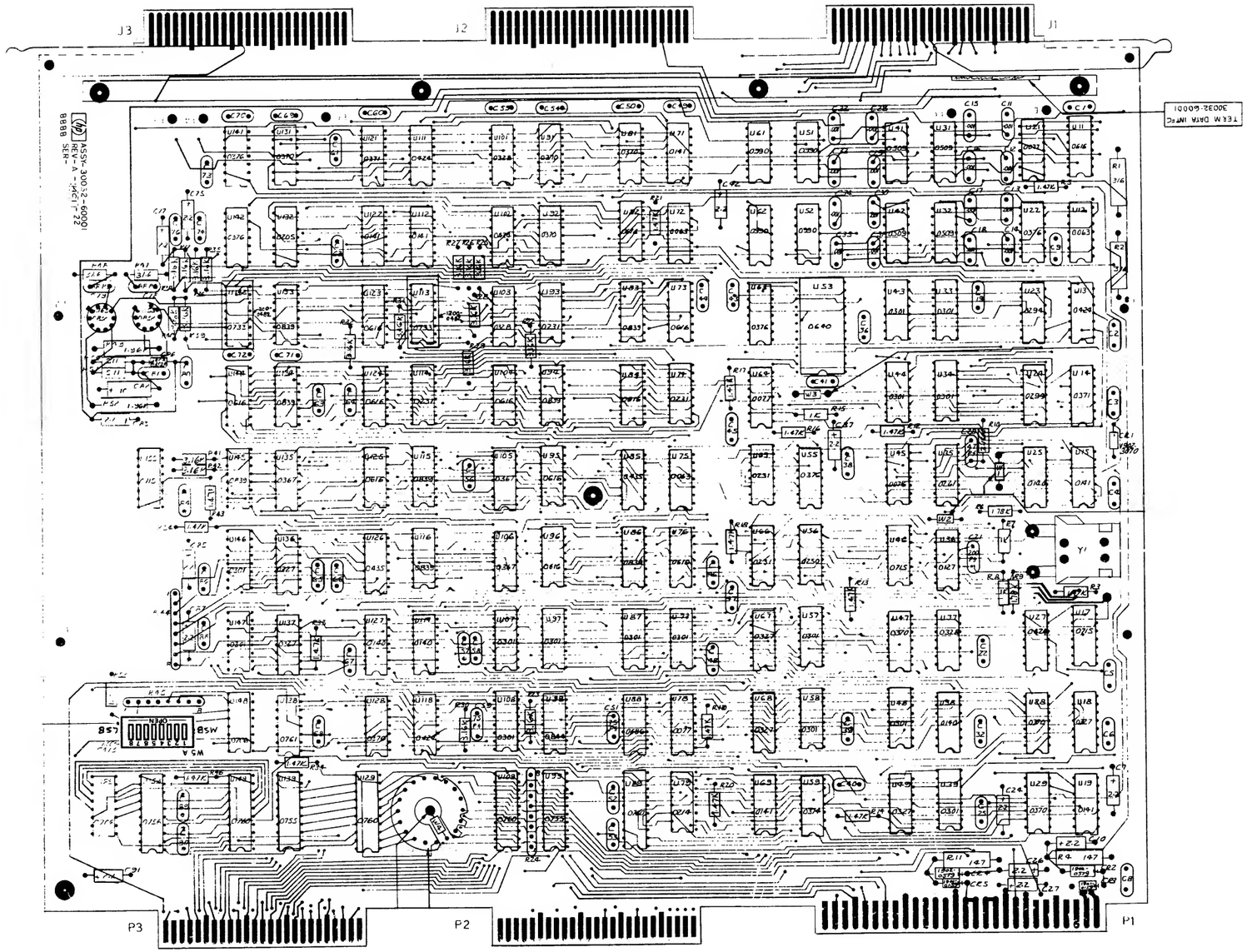

UNLESS OTHERWISE SPECIFIED:
ALL RESISTANCE IN OHMS
ALL RESISTORS 1/8 W
ALL RESISTOR PACK 1810-0020
ALL CAPACITANCE IN MICRO-FARADS
ALL CAPACITORS .01 CER DISC
ALL IC'S ARE 1820-

Terminal Data Interface PCA, 30032-60001, Sheet 5 of 5

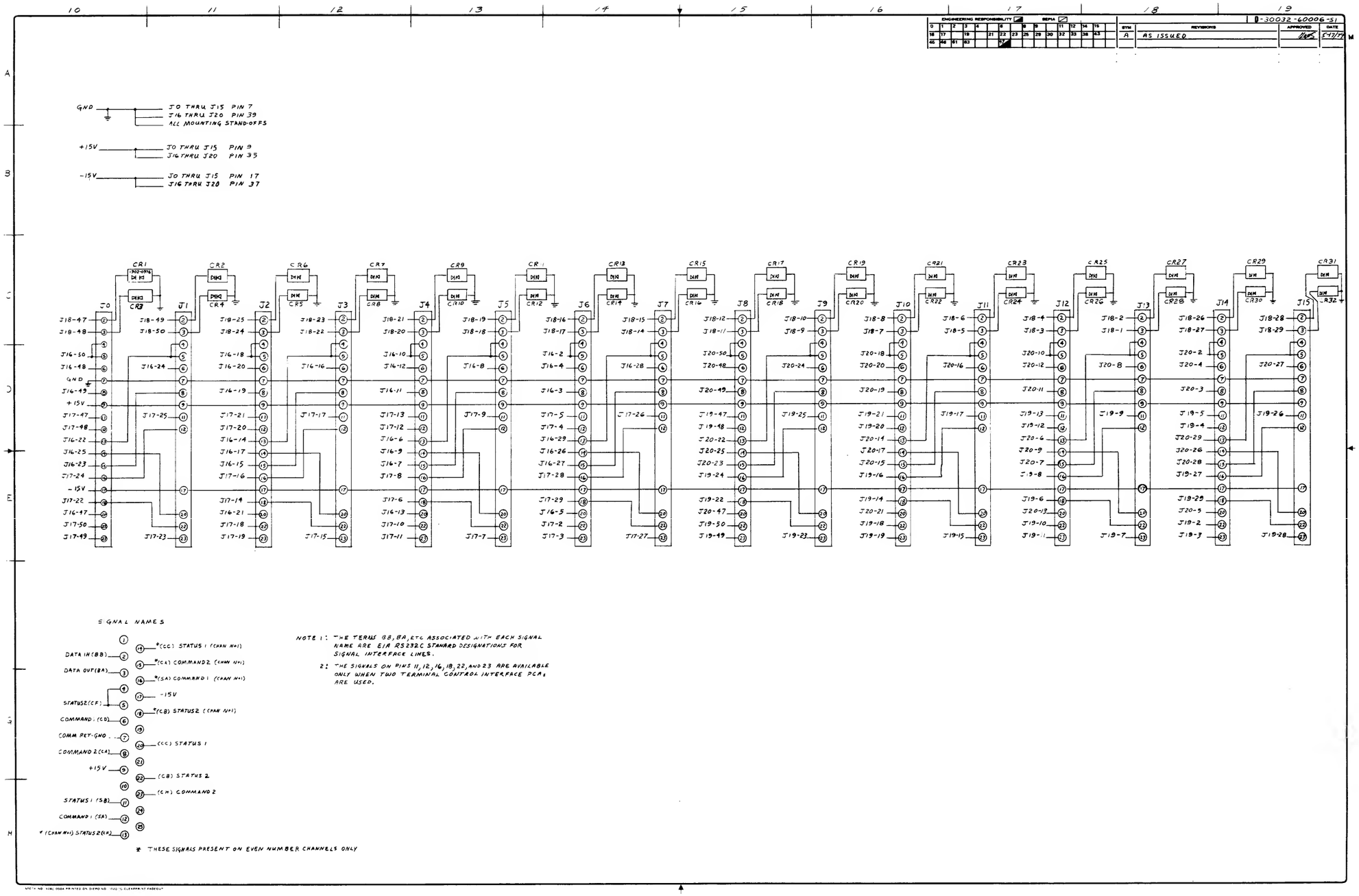

MUX Panel, 30032-60006, Sheet 1 of 2

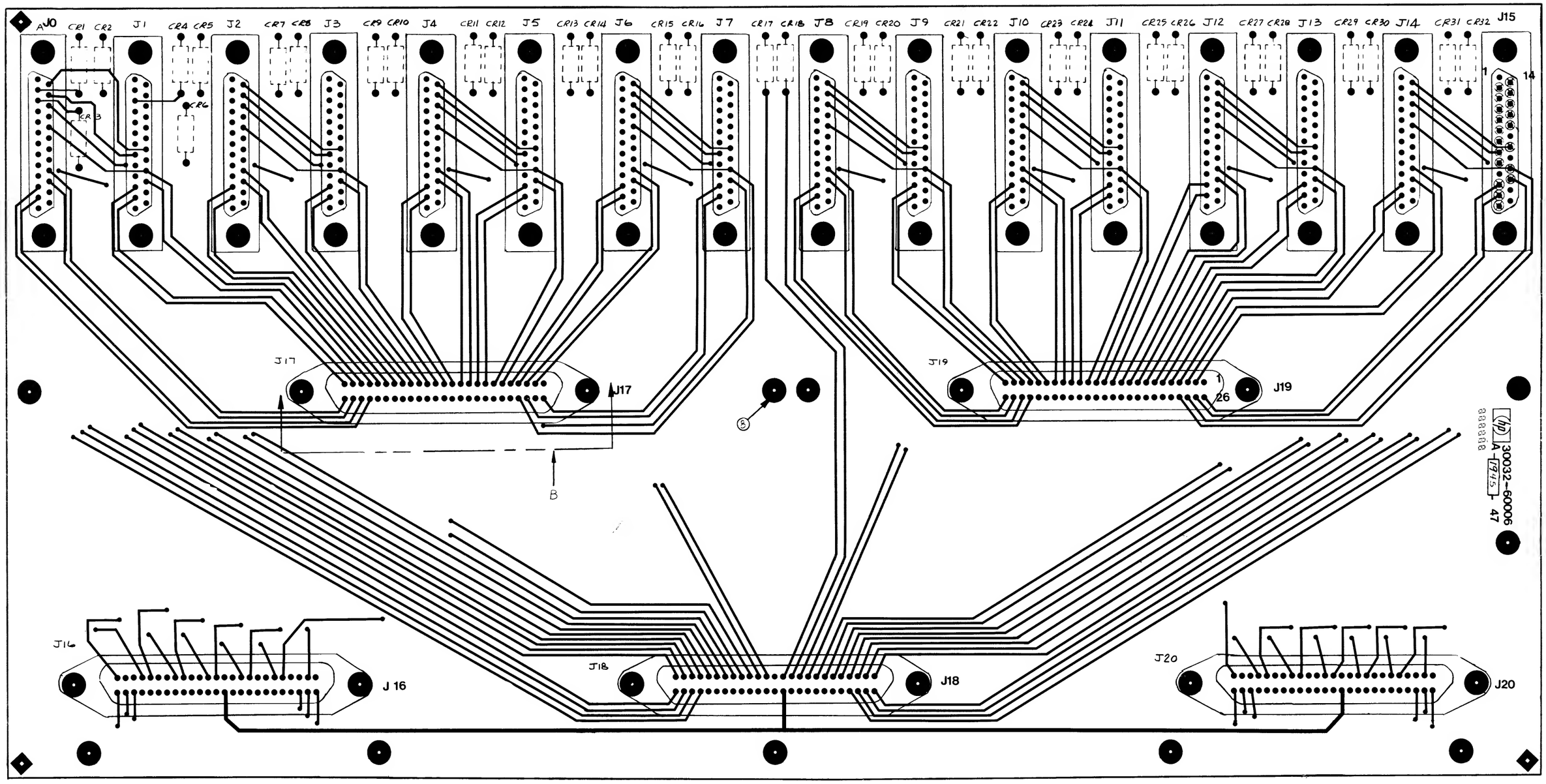

MUX Panel, 30032-60006, Sheet 2 of 2

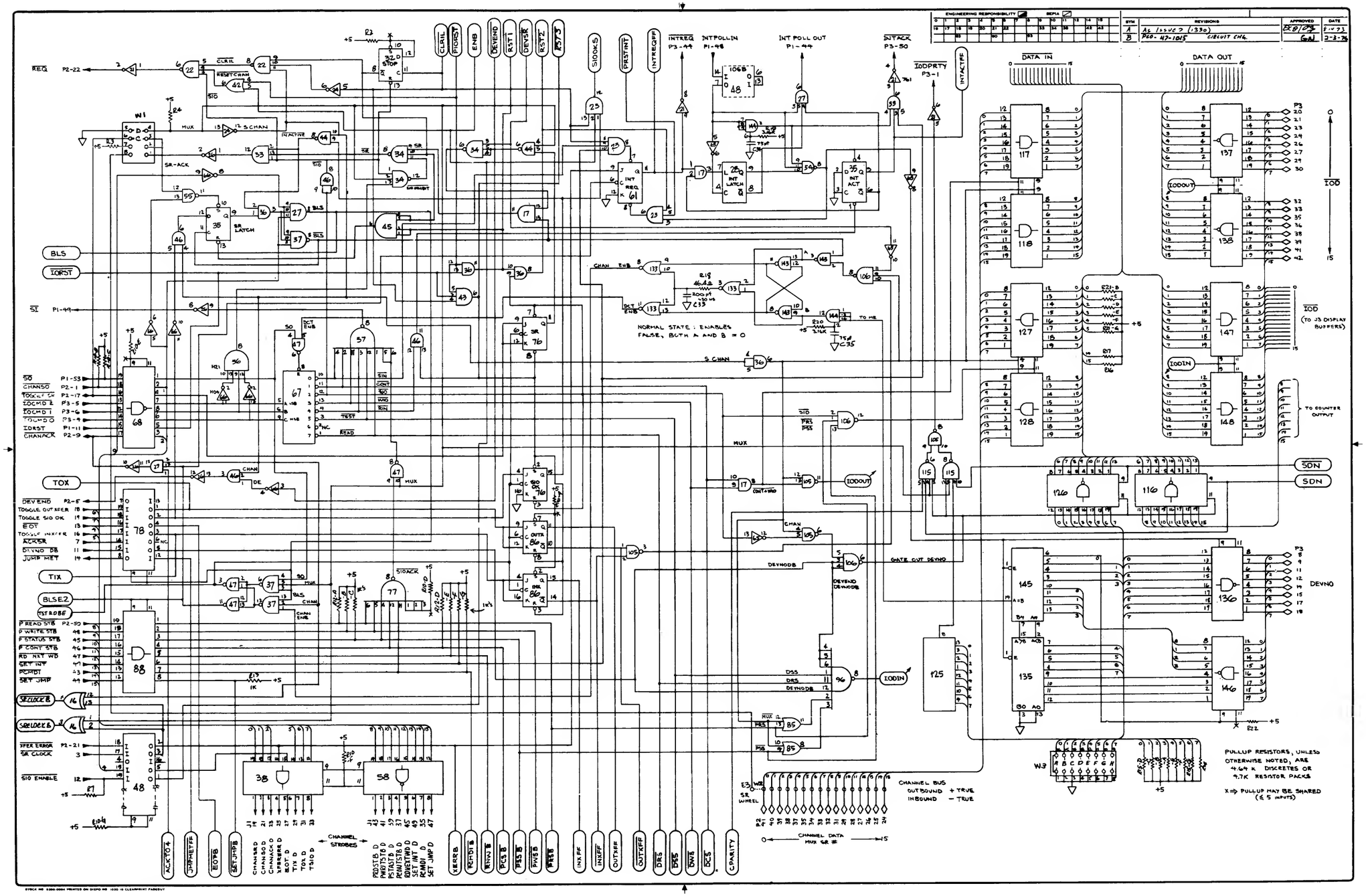

Selector Channel Maintenance PCA, 30033-60001, Sheet 1 of 3

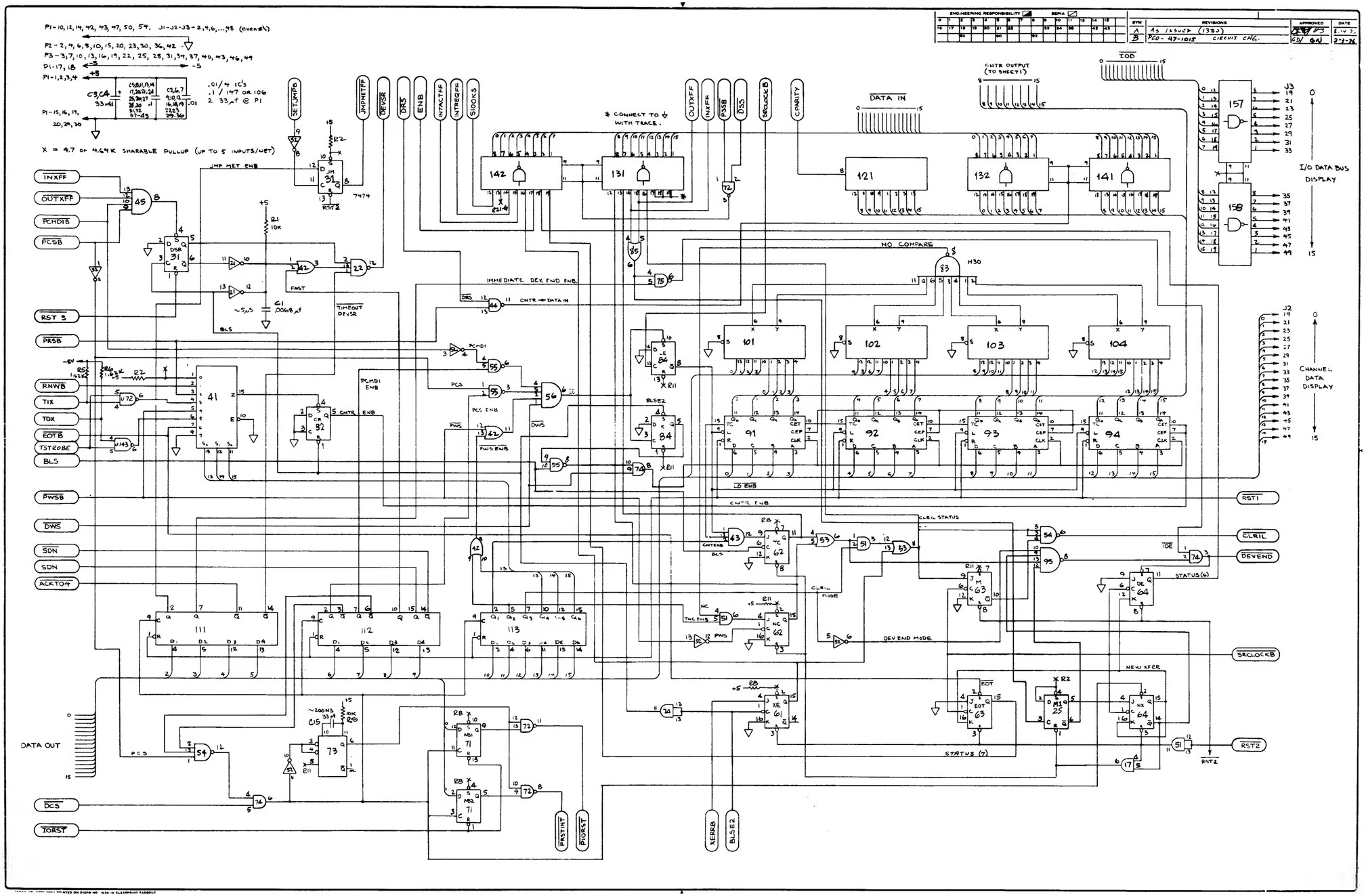

Selector Channel Maintenance PCA, 30033-60001, Sheet 2 of 3

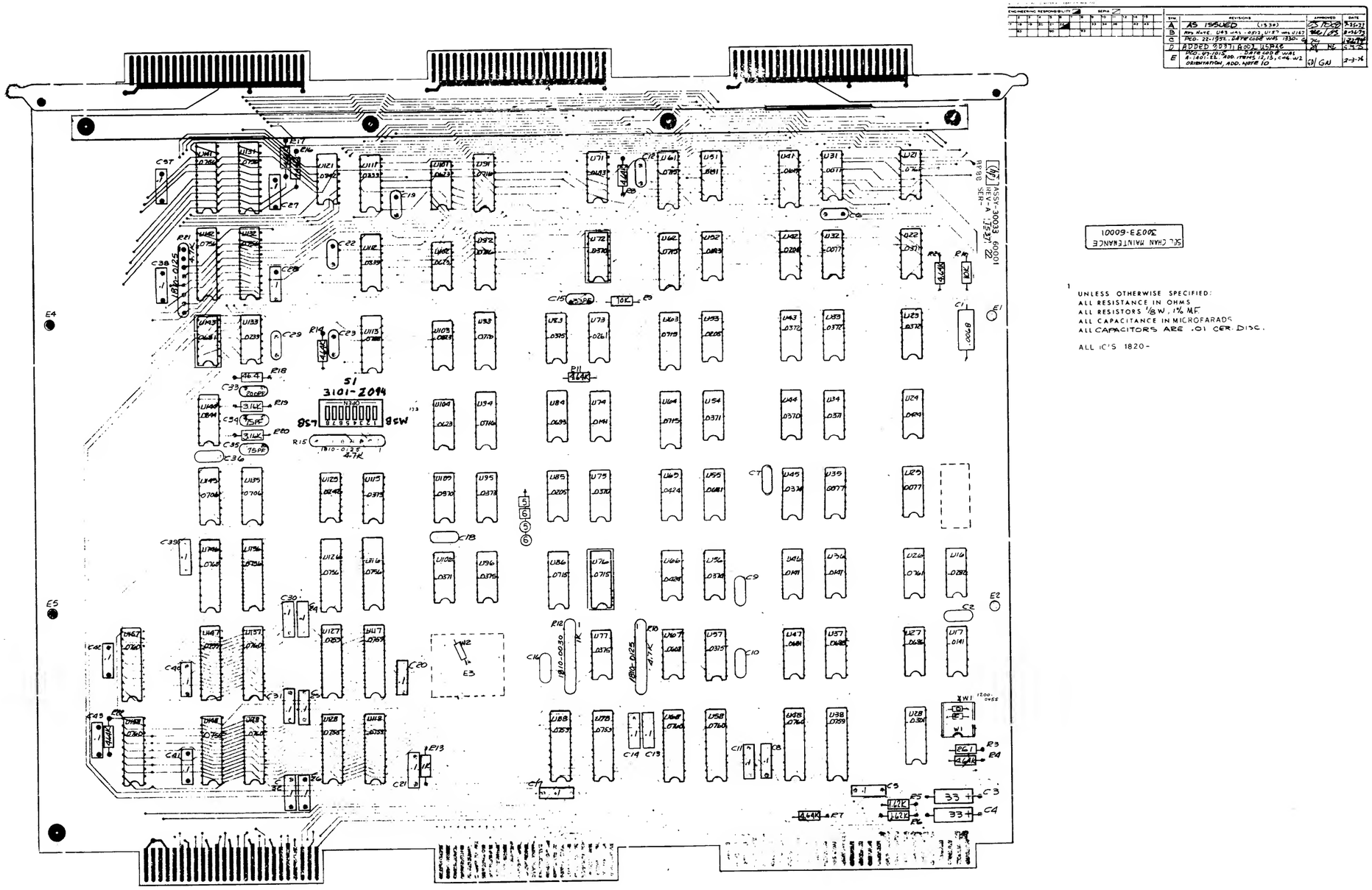

Selector Channel Maintenance PCA, 30033-60001, Sheet 3 of 3

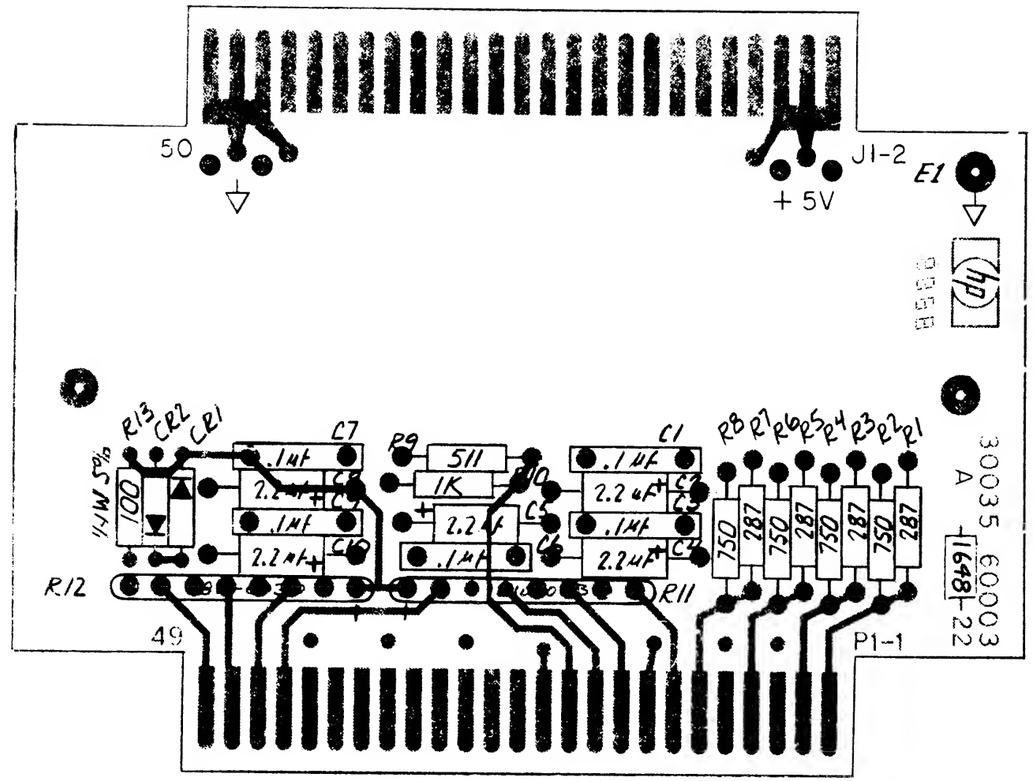

1. UNLESS OTHERWISE NOTED
ALL RESISTANCE IN OHMS
ALL RESISTORS 1/8W 1% M.F.
ALL CAPACITANCE IN MICRO_FARADS
ALL DIODES #1901_0159

Multiplexer Channel Bus Terminator, 30035-60003, Sheet 1 of 2

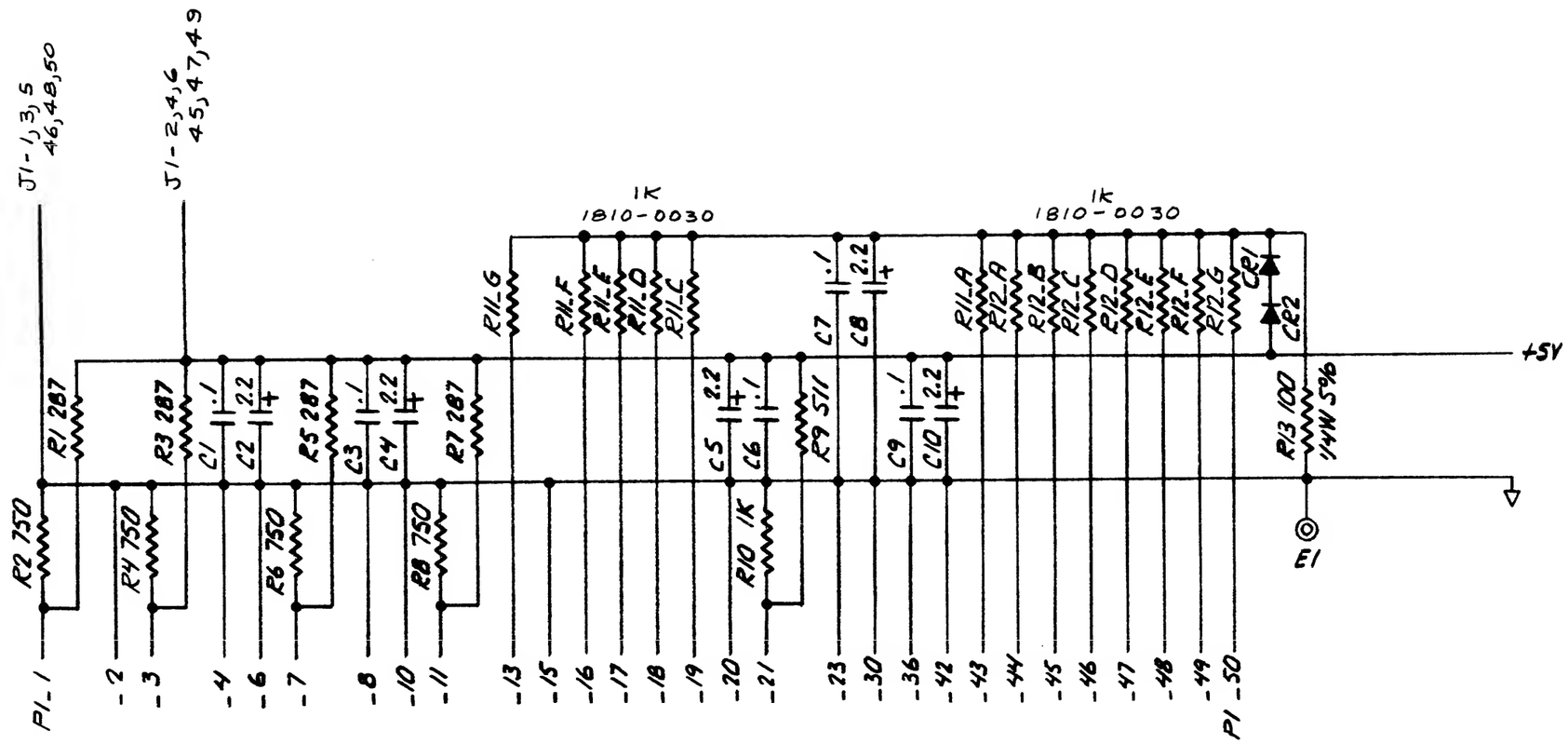

UNLESS OTHERWISE NOTED
ALL RESISTANCE IN OHMS
ALL RESISTORS 1/8W 1% MF
ALL CAPACITANCE IN MICRO FARADS
ALL DIODES #1901_0159

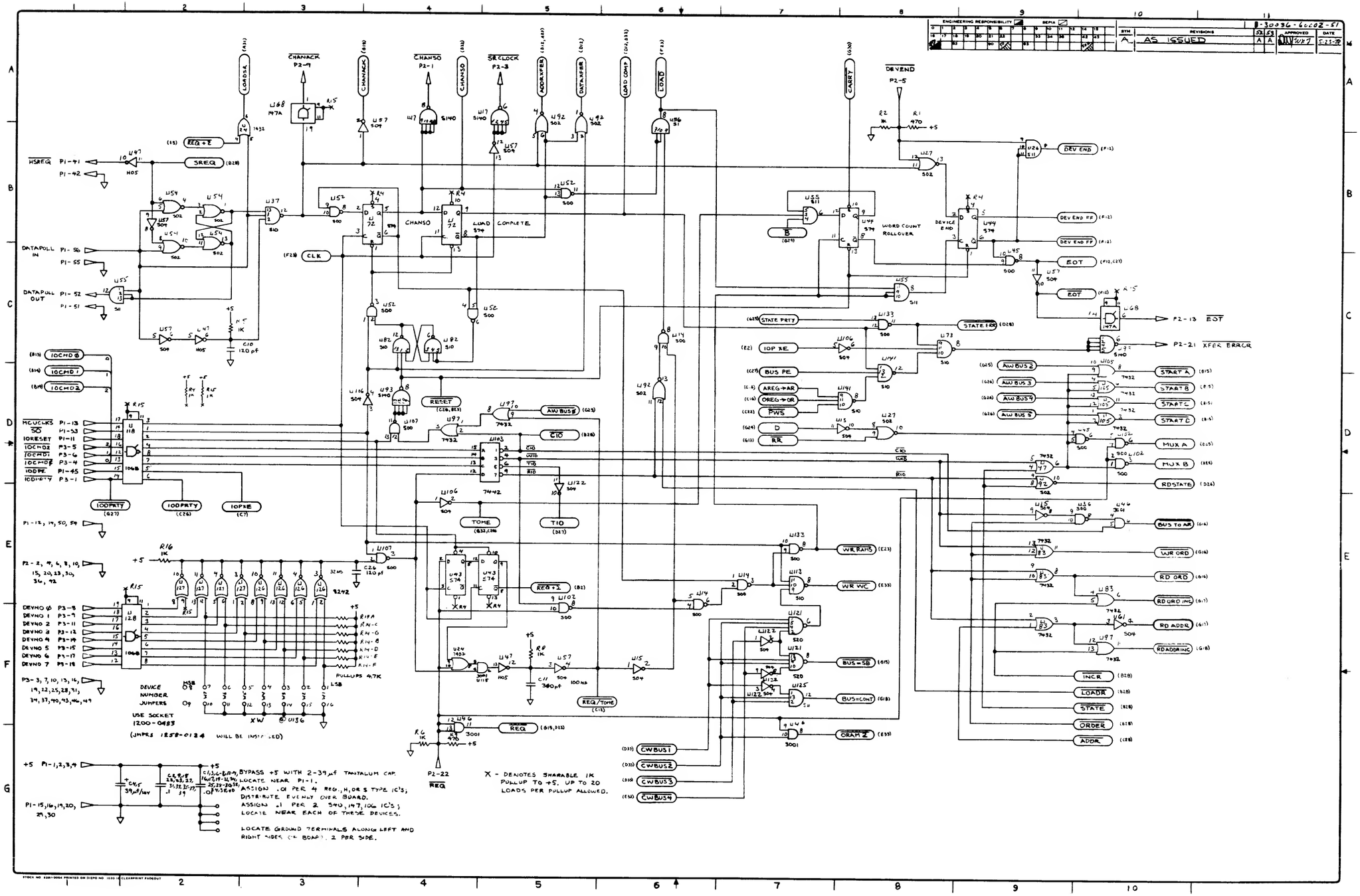

MUX Channel PCA, 30036-60002, Sheet 1 of 4

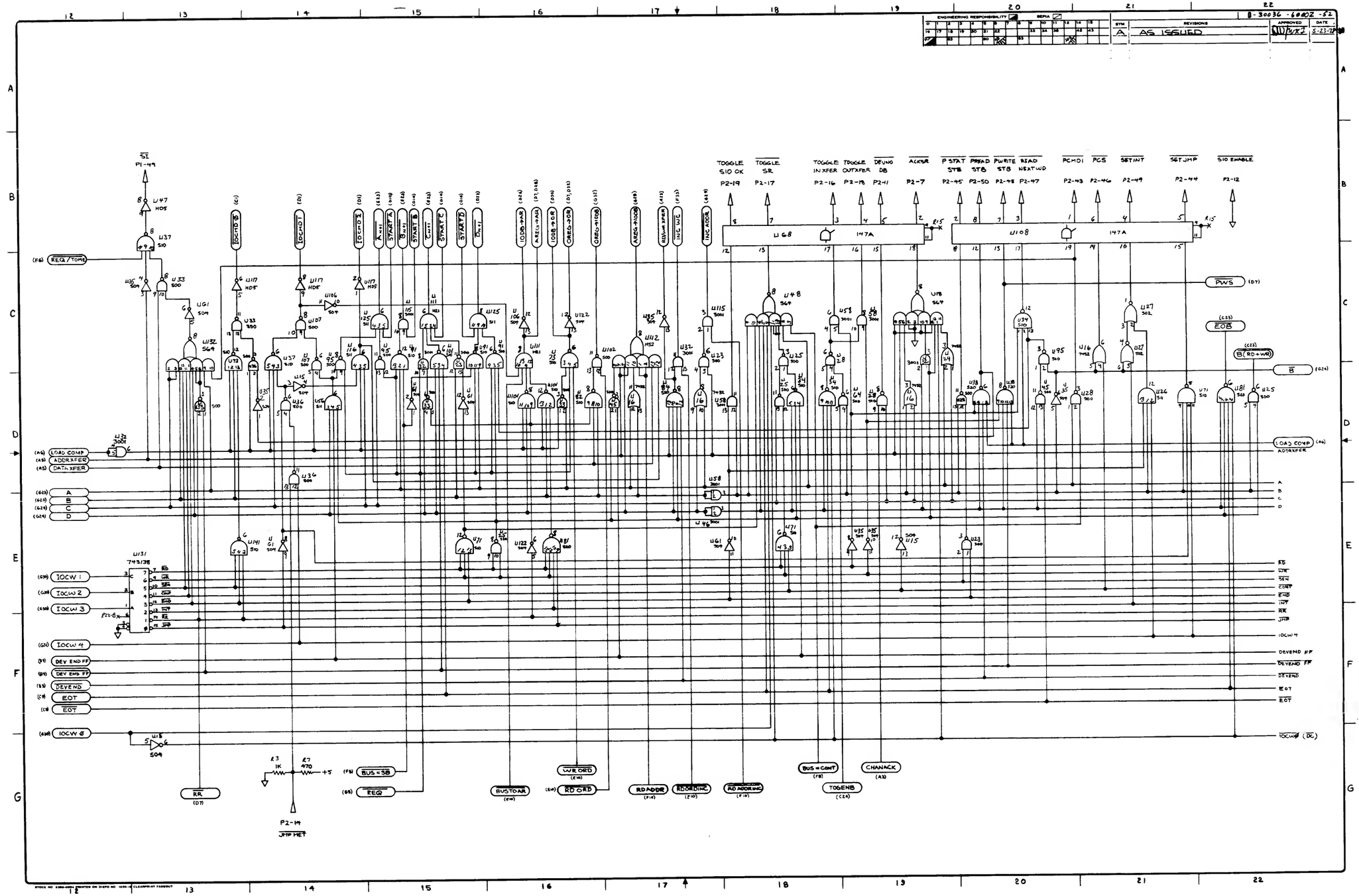

MUX Channel PCA, 30036-60002, Sheet 2 of 4

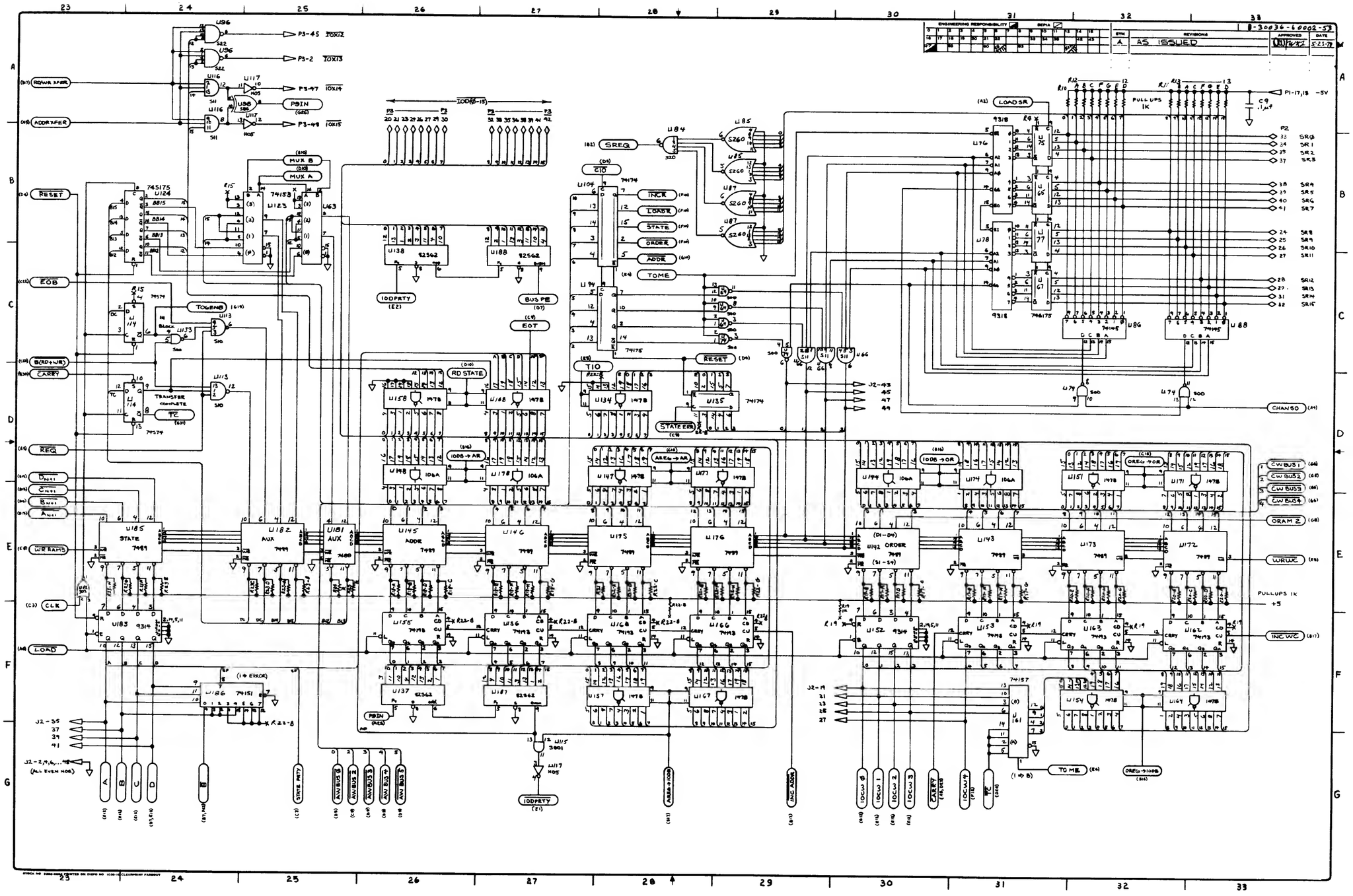

MUX Channel PCA, 30036-60002, Sheet 3 of 4

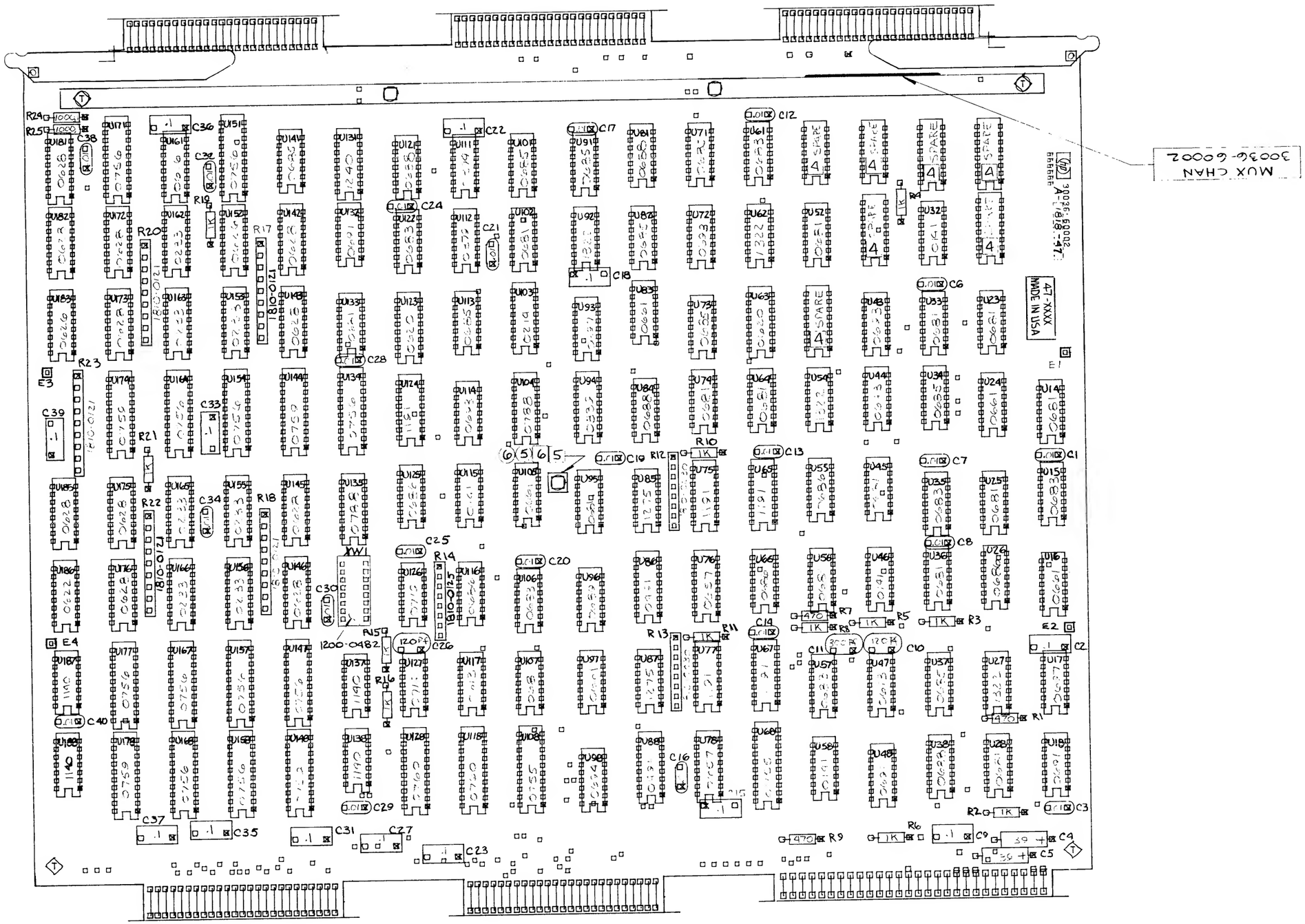

MUX Channel PCA, 30036-60002, Sheet 4 of 4

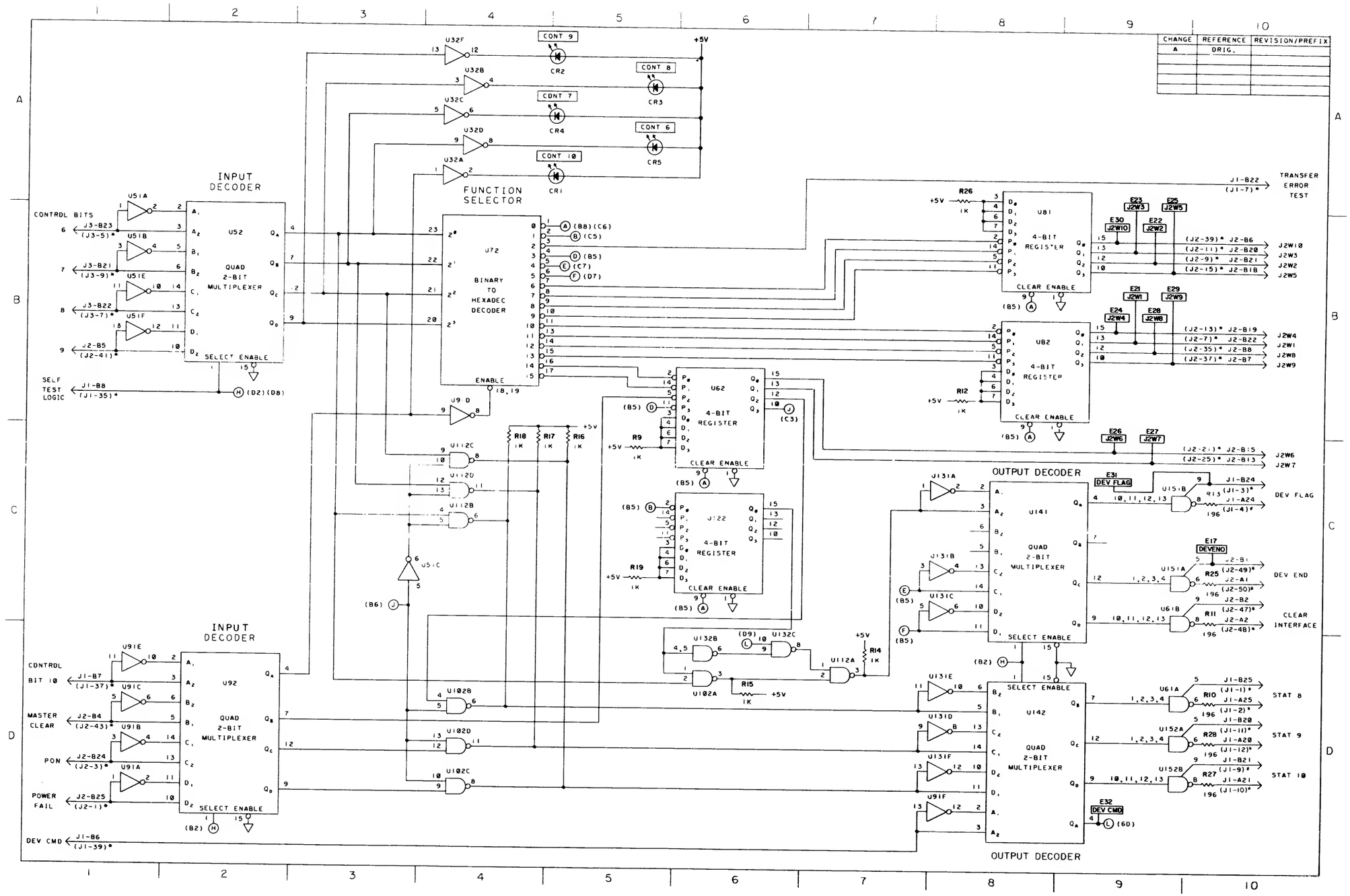

Diagnostic Hardware Assembly, 30049-60003, Sheet 1 of 3

CHANGE	REFERENCE	REVISION/PREFIX
A	ORIG	

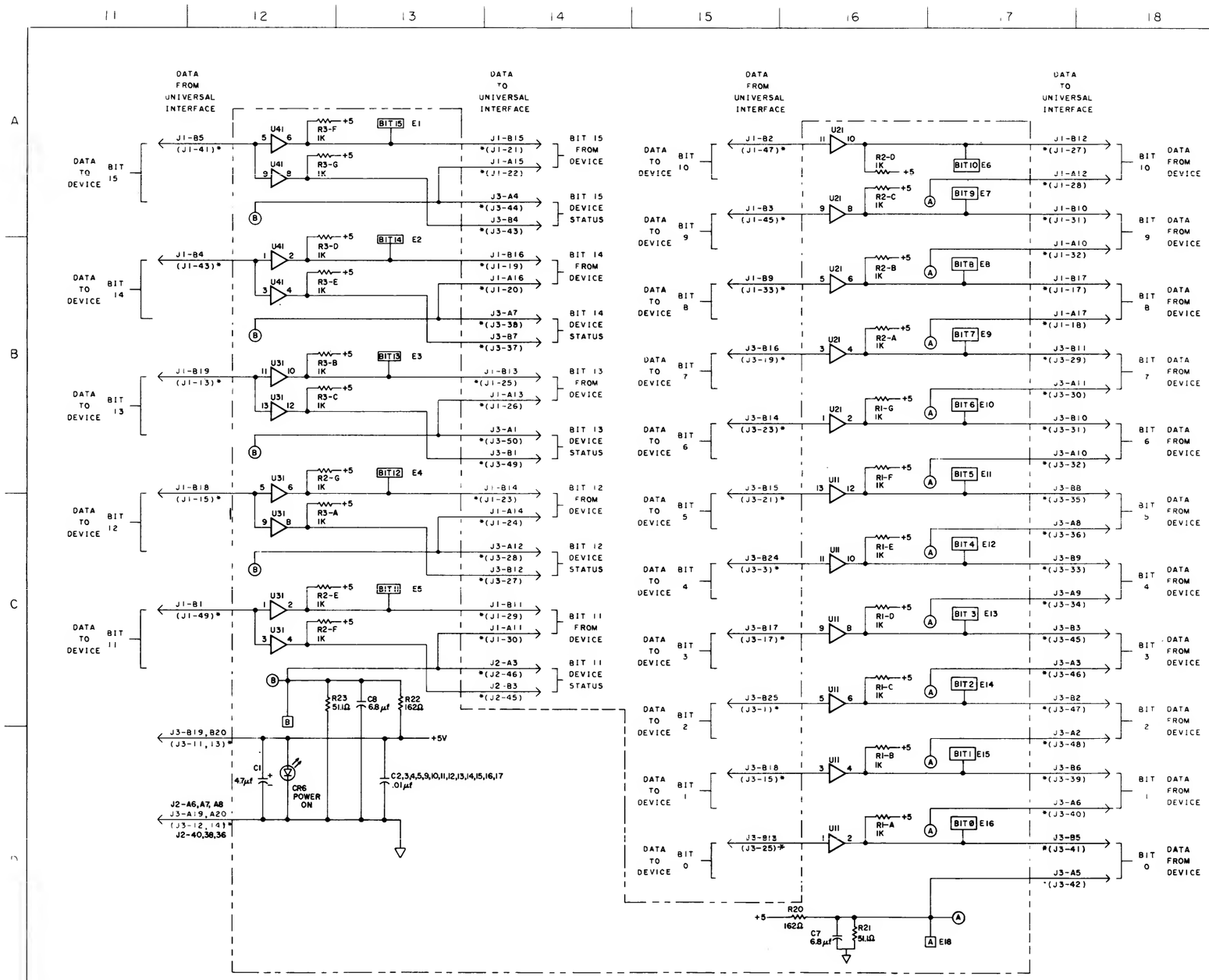

NOTES

* INDICATES CORRESPONDING CONNECTOR PIN ON UNIVERSAL INTERFACE PCA

Diagnostic Hardware Assembly, 30049-60003, Sheet 2 of 3

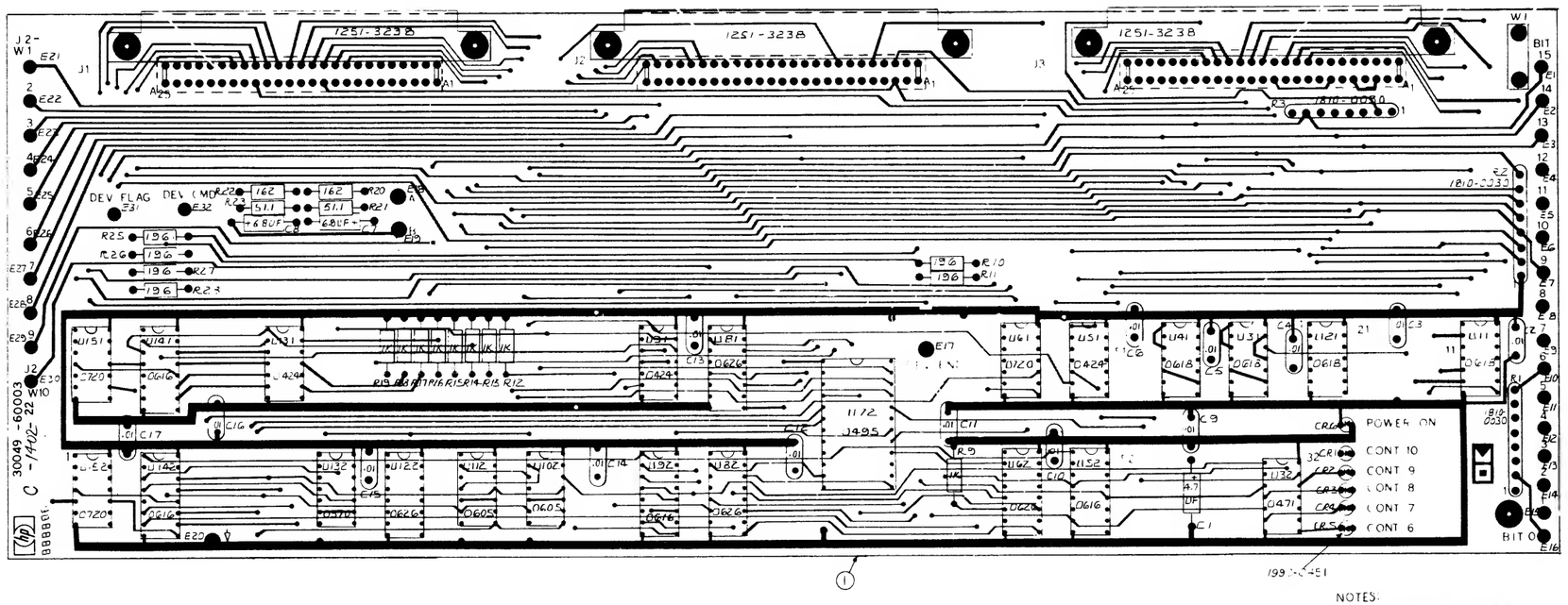

NOTES:
1 UNLESS OTHERWISE SPECIFIED:
ALL RESISTANCE IN OHMS
ALL RESISTORS 1/8 W, 1%
ALL CAPACITANCE IN MICROFARADS
ALL IC'S ARE 1820-

Diagnostic Hardware Assembly, 30049-60003, Sheet 3 of 3

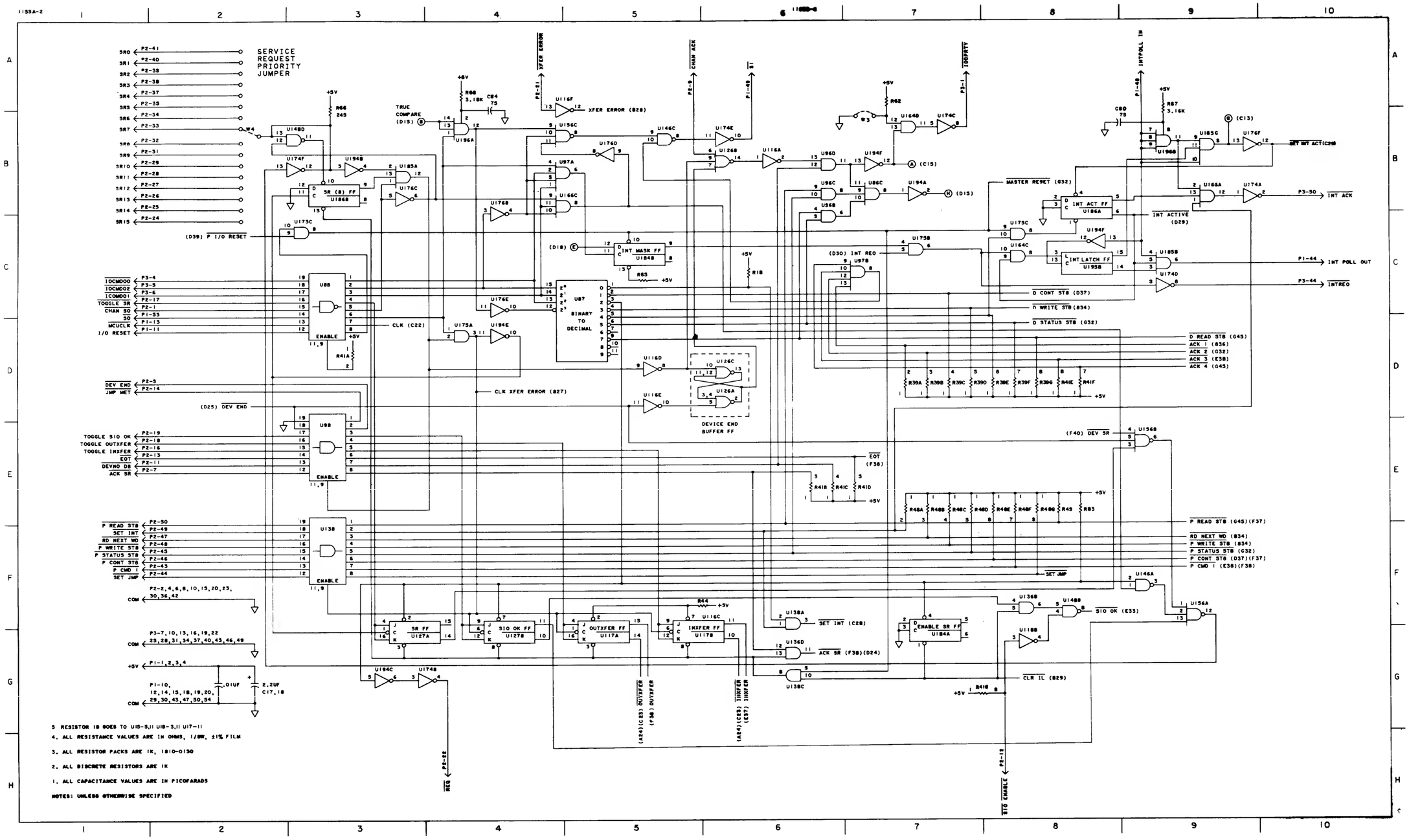

Universal Interface (TTL) PCA, 30050-60001, Sheet 1 of 6

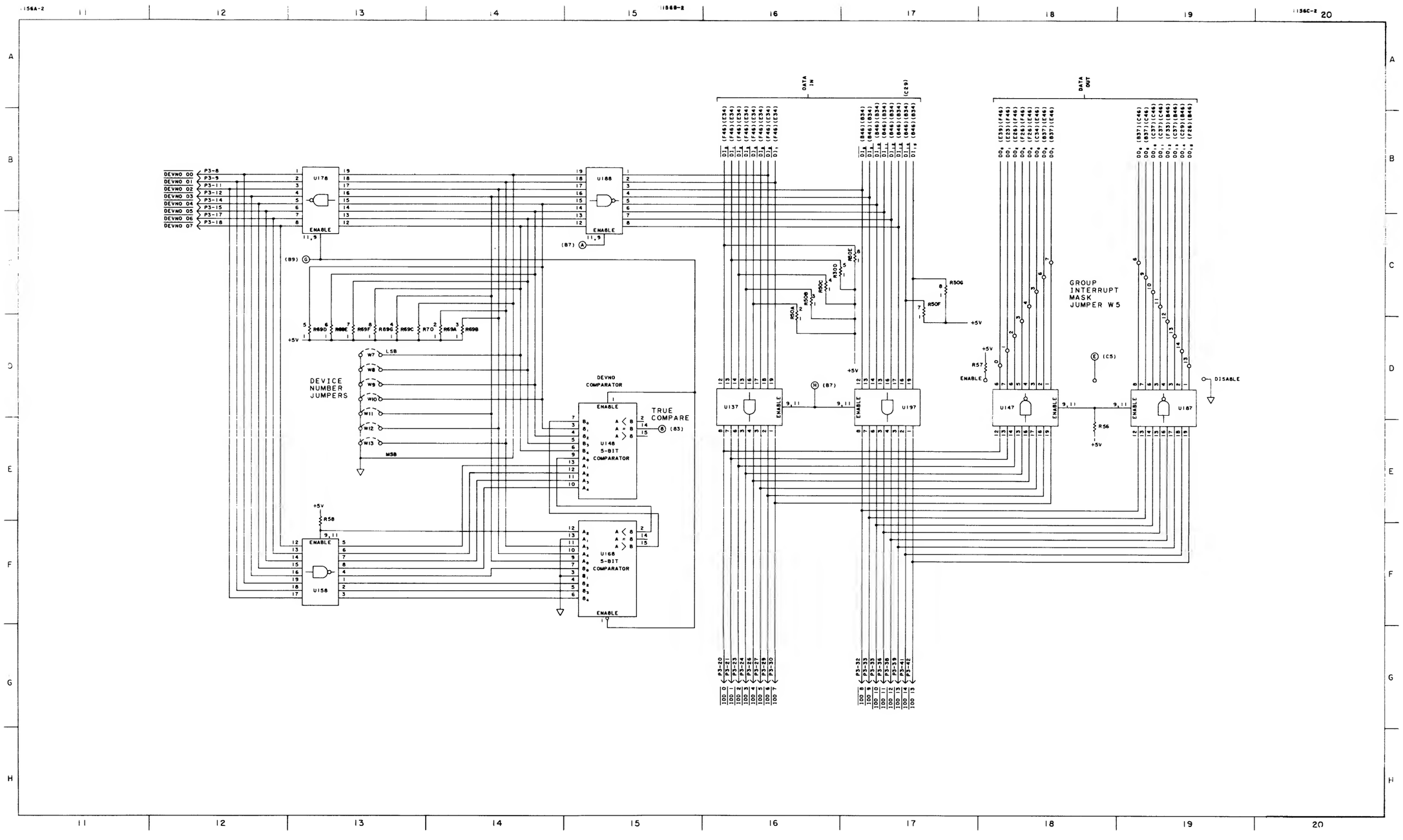

Universal Interface (TTL) PCA, 30050-60001, Sheet 2 of 6

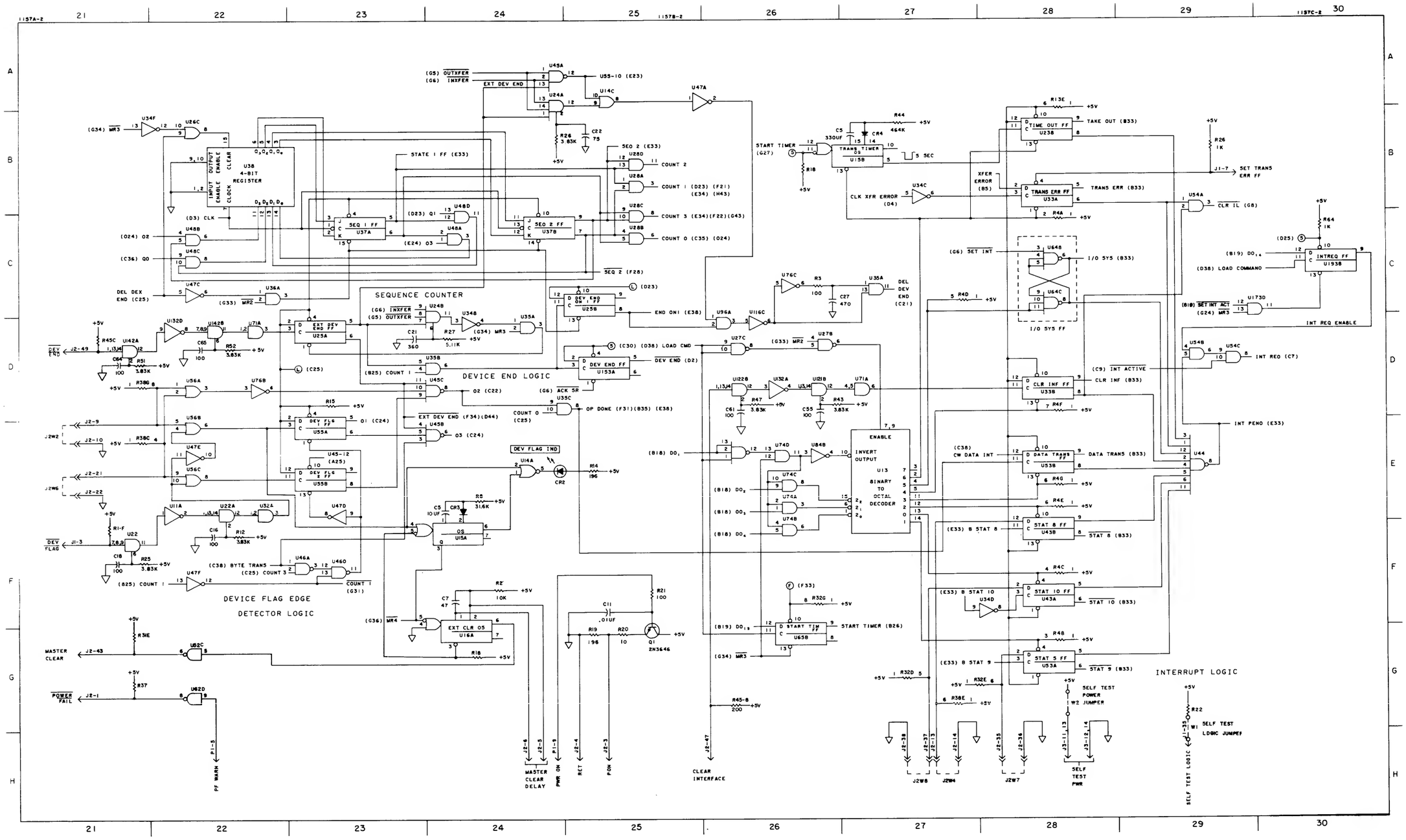

Universal Interface (TTL) PCA, 30050-60001, Sheet 3 of 6

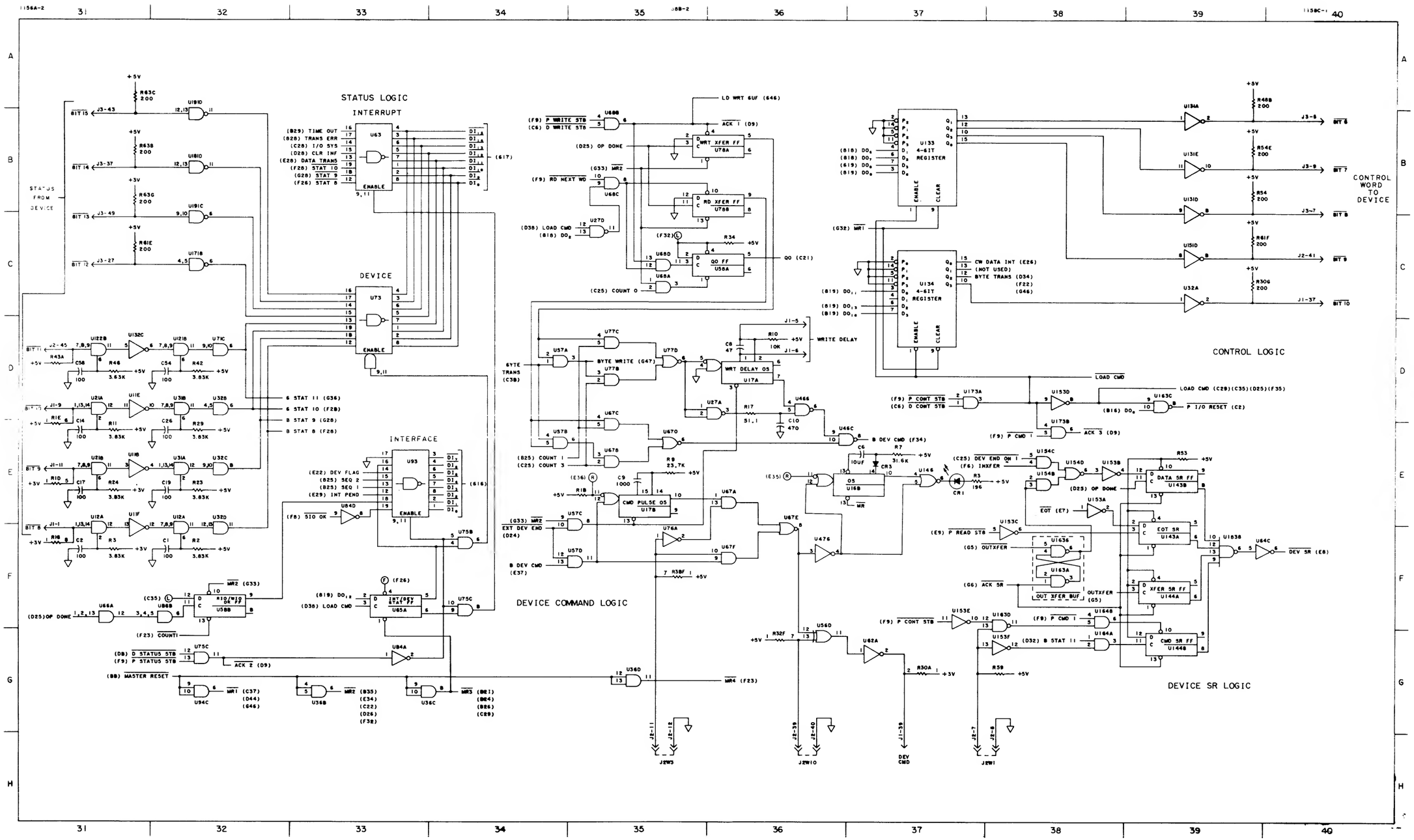

Universal Interface (TTL) PCA, 30050-60001, Sheet 4 of 6

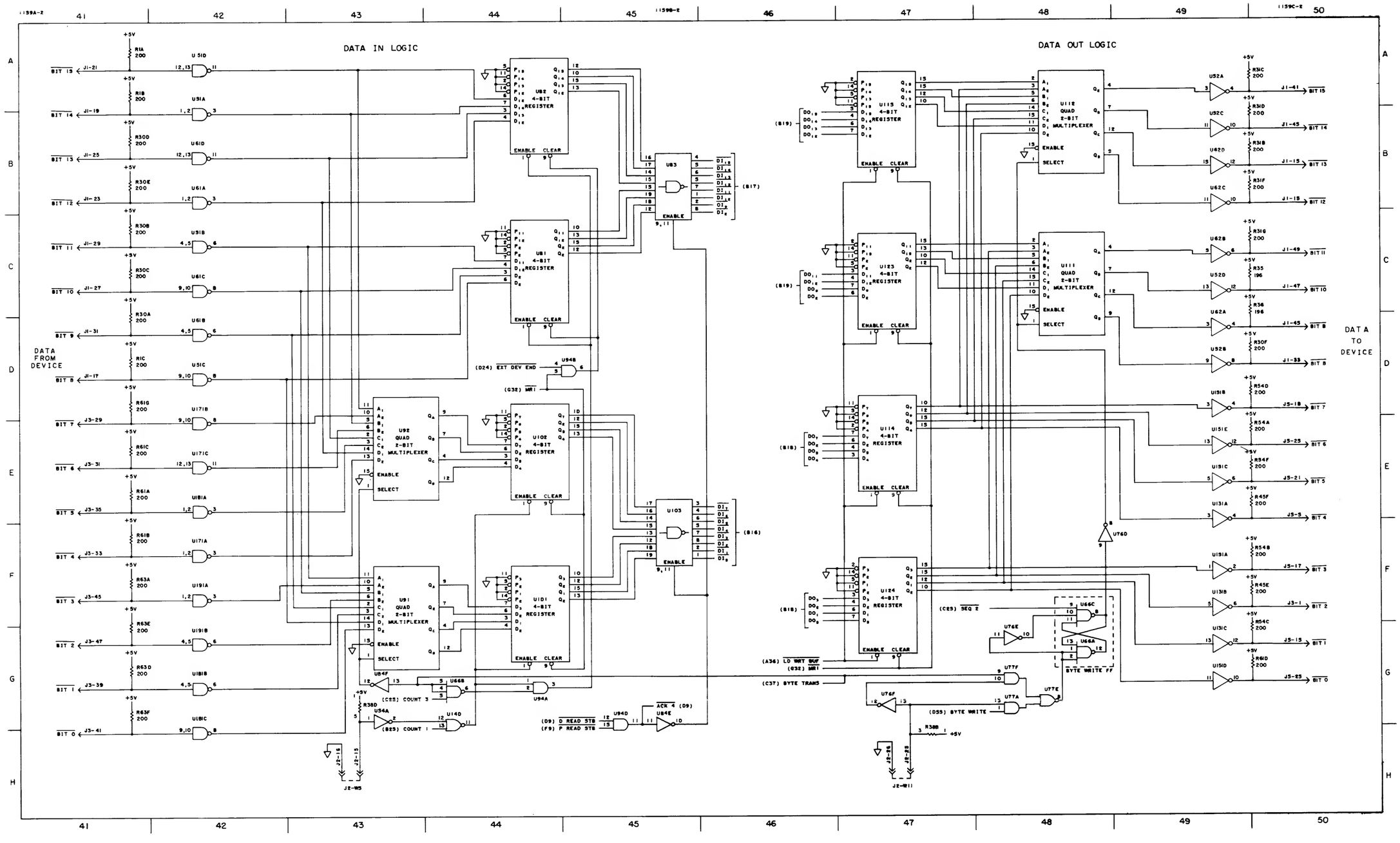
DATA IN LOGIC
DATA OUT LOGIC
DATA FROM DEVICE
DATA TO DEVICE
U82 4-BIT REGISTER
U81 4-BIT REGISTER
U115 4-BIT REGISTER
U123 4-BIT REGISTER
U114 4-BIT REGISTER
U124 4-BIT REGISTER
U102 4-BIT REGISTER
U101 4-BIT REGISTER
U92 QUAD 2-BIT MULTIPLEXER
U91 QUAD 2-BIT MULTIPLEXER
U112 QUAD 2-BIT MULTIPLEXER
U111 QUAD 2-BIT MULTIPLEXER
U83
U103
ENABLE
CLEAR
SELECT
BYTE WRITE FF
(D24) EXT DEV END
(G32) WRI
(C23) COUNT 3
(B23) COUNT 1
(D9) D READ STB
(F9) P READ STB
(A36) LD WRT BUF
(C37) BYTE TRANS
(C23) SEQ 2
(D59) BYTE WRITE
ACK 4 (D9)
(B19)
(B18)
(B16)
(B17)
+5V

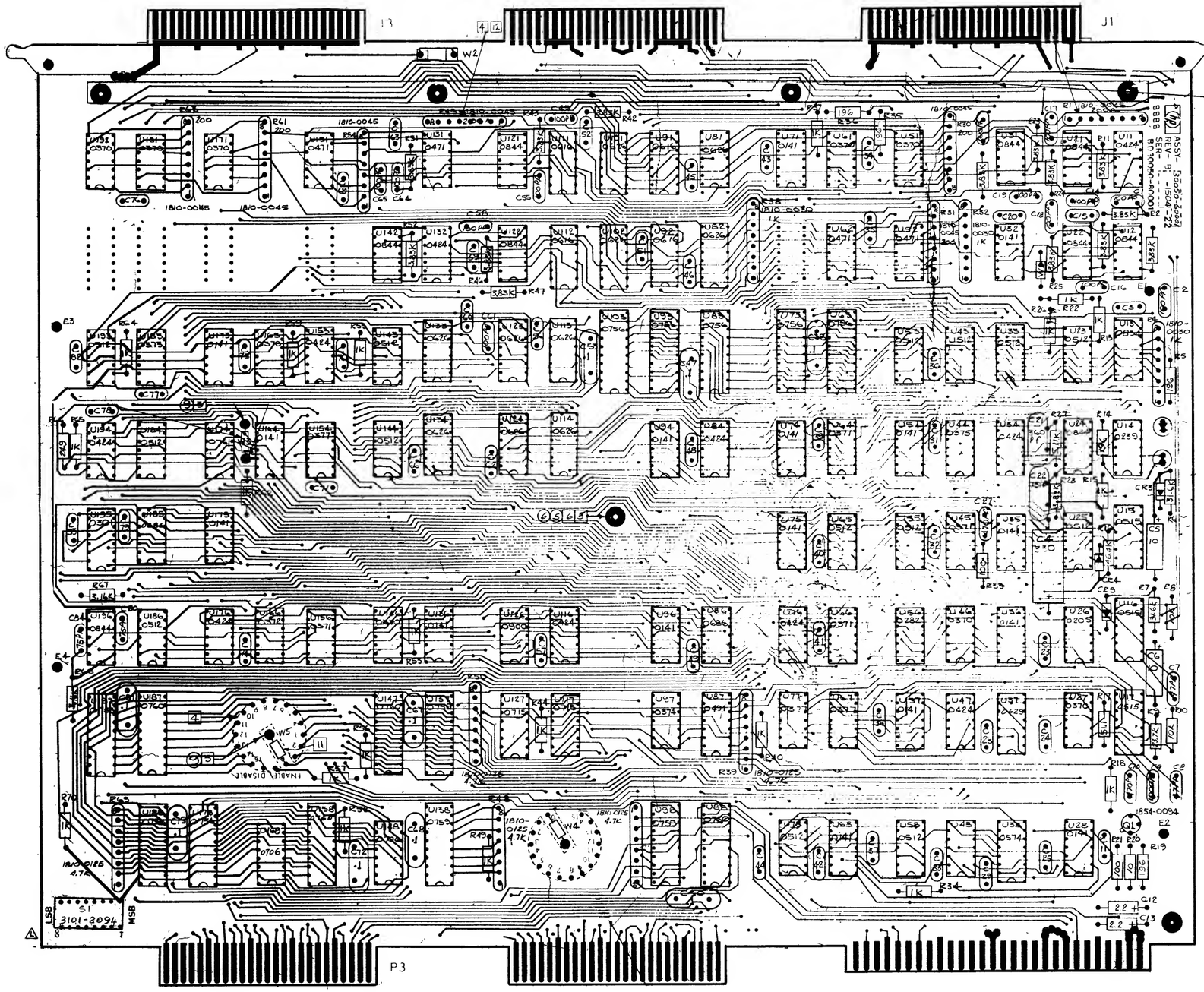

1 NOTE: UNLESS OTHERWISE SPECIFIED
ALL RESISTANCE IN OHMS
ALL RESISTORS 1/8W ±1% FILM
ALL CAPACITANCE IN MICROFARADS
ALL CAPACITORS .01μf CERAMIC DISC
ALL DIODES ARE 1901-0081
ALL IC'S 1820-

Universal Interface (TTL) PCA, 30050-60001, Sheet 6 of 6

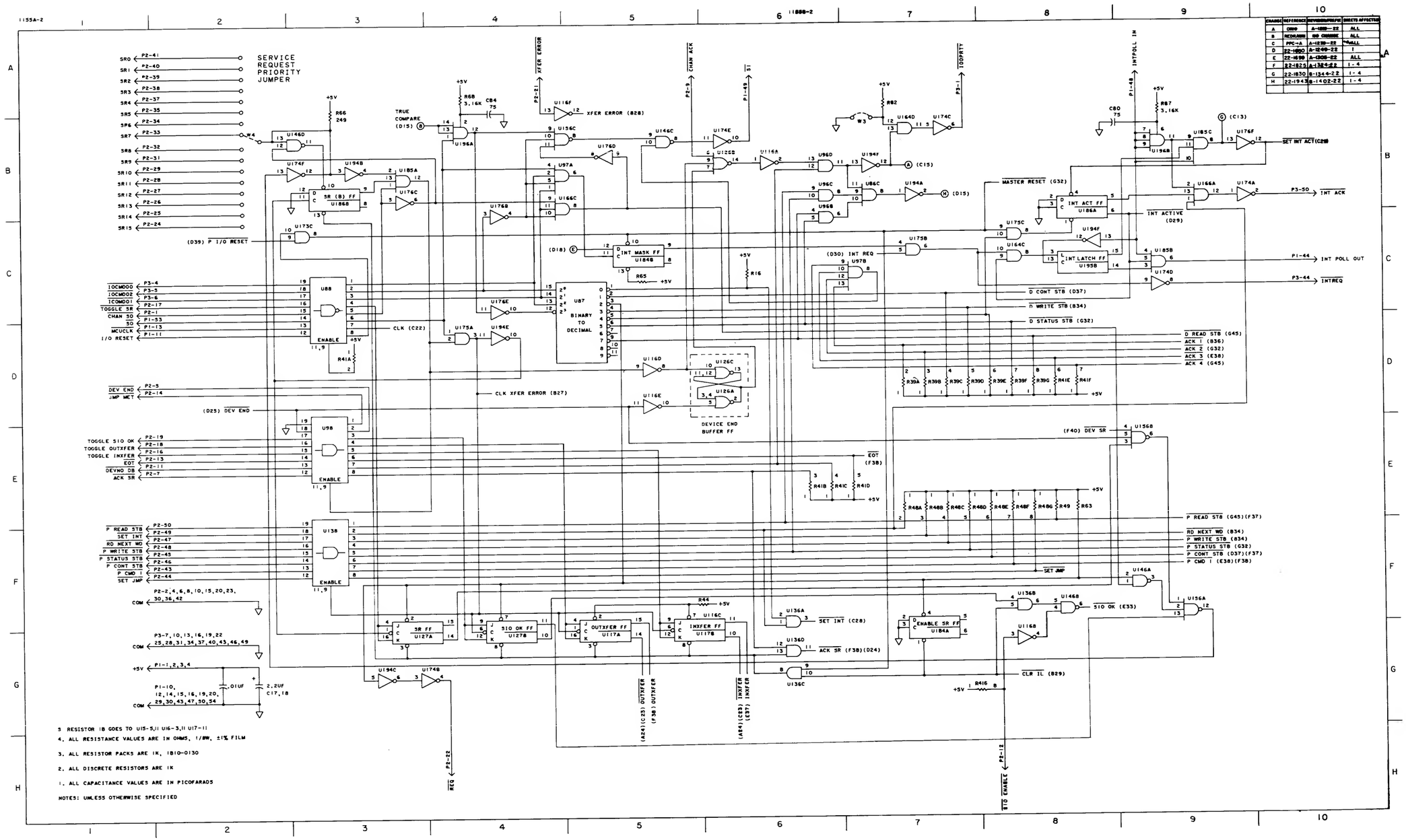

CHANGE	REFERENCE	REVISION/SUPLIES	EFFECTS AFFECTED
A	0000	A-1000-22	ALL
B	NEGRAMM	NO CHANGE	ALL
C	PPC-A	A-1230-22	ALL
D	22-1690	A-1240-22	1
E	22-1690	A-1300-22	ALL
F	22-1825	A-1344-22	1-4
G	22-1830	B-1344-22	1-4
H	22-1943	B-1402-22	1-4

Card Reader Punch Interface PCA, 30050-60008, Sheet 1 of 6

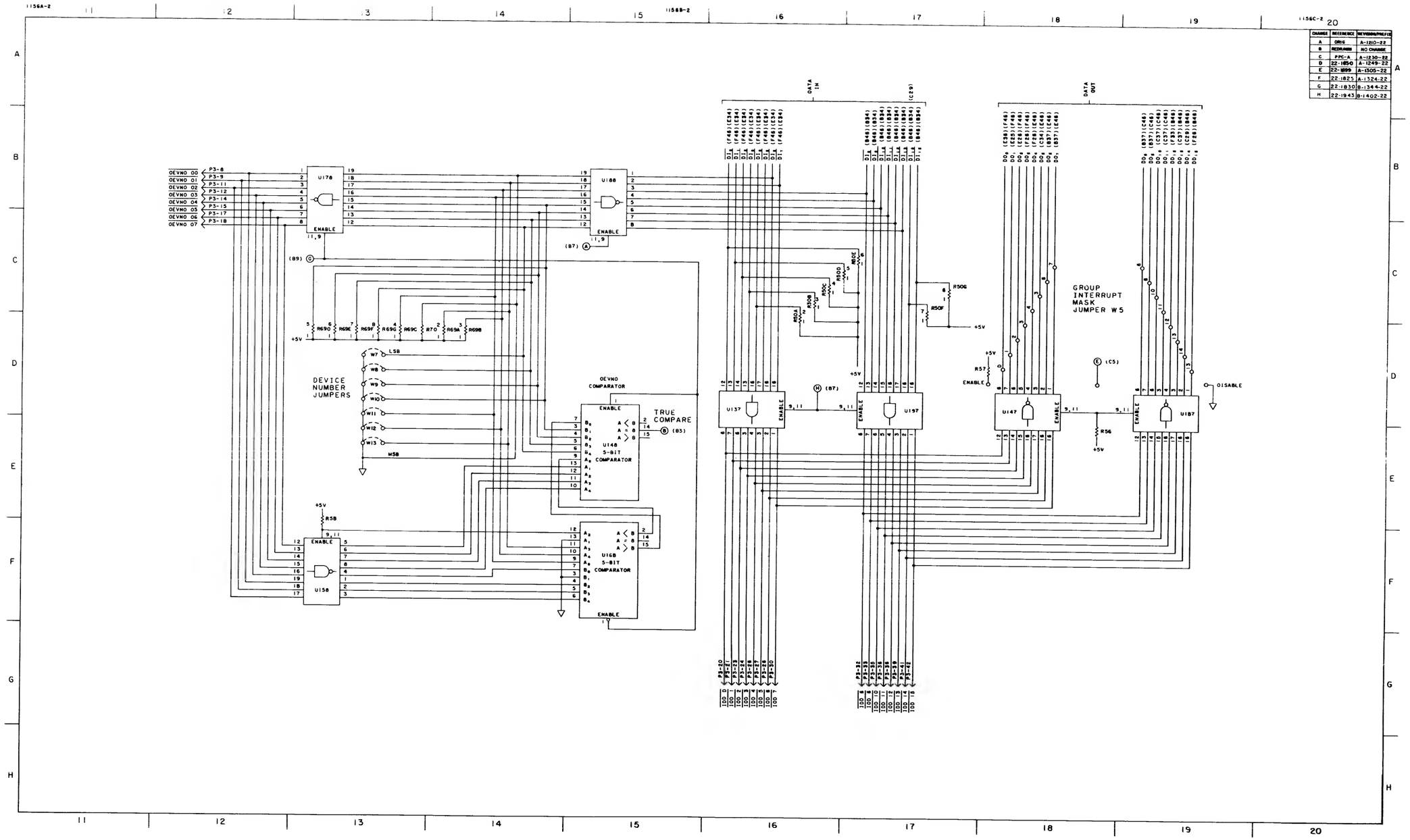

CHANGE	REFERENCE	REVISION/PREFIX
A	ORIG	A-1210-22
B	REDRAWN	NO CHANGE
C	PTC-A	A-1230-22
D	22-1850	A-1249-22
E	22-1899	A-1305-22
F	22-1825	A-1324.22
G	22-1830	B-1344-22
H	22-1943	B-1402-22

Card Reader Punch Interface PCA, 30050-60008, Sheet 2 of 6

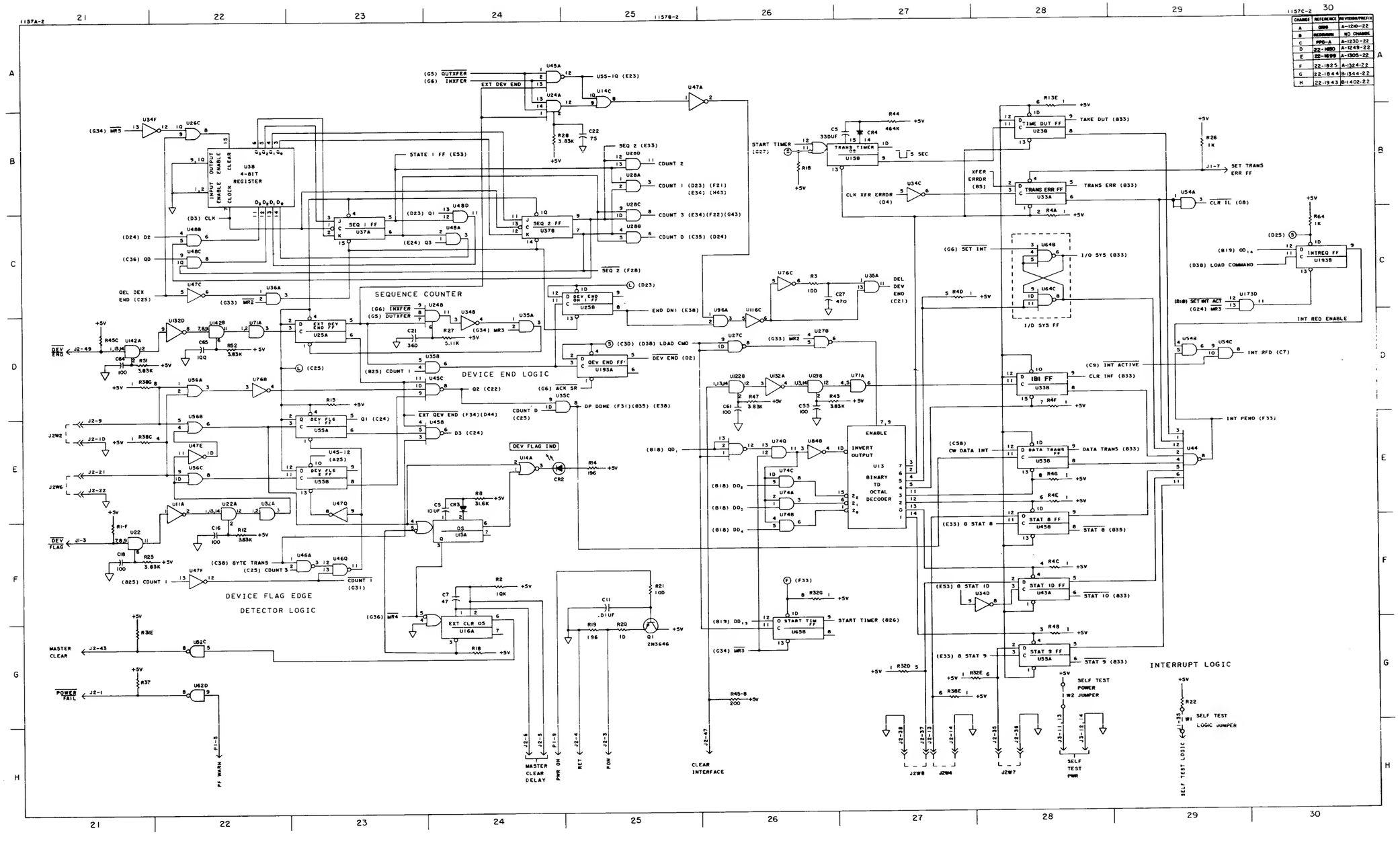

CHANGE	REFERENCE	REVISION/PREFIX
A	GMB	A-1210-22
B	REDRAWN	NO CHANGE
C	PPG-A	A-1230-22
D	22-1680	A-1249-22
E	22-1699	A-1305-22
F	22-1825	A-1324-22
G	22-1844	B-1344-22
H	22-1943	B-1402-22

Card Reader Punch Interface PCA, 30050-60008, Sheet 3 of 6

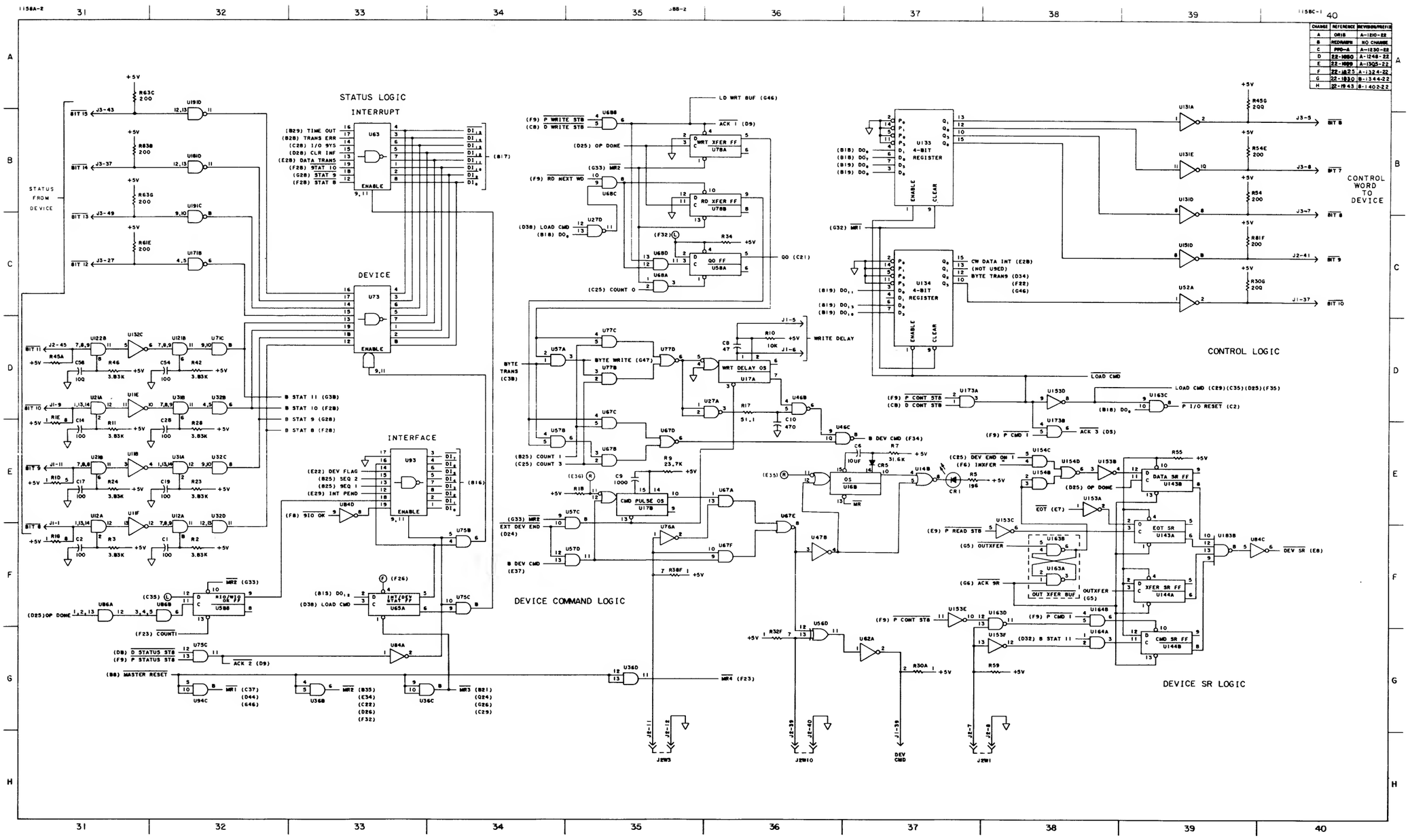

CHANGE	REFERENCE	REVISION/PREFIX
A	OR18	A-1210-22
B	REDRAWN	NO CHANGE
C	PPR-4	A-1230-22
D	22-1880	A-1248-22
E	22-1889	A-1305-22
F	22-1825	A-1324-22
G	22-1830	B-1344-22
H	22-1843	B-1402-22

Card Reader Punch Interface PCA, 30050-60008, Sheet 4 of 6

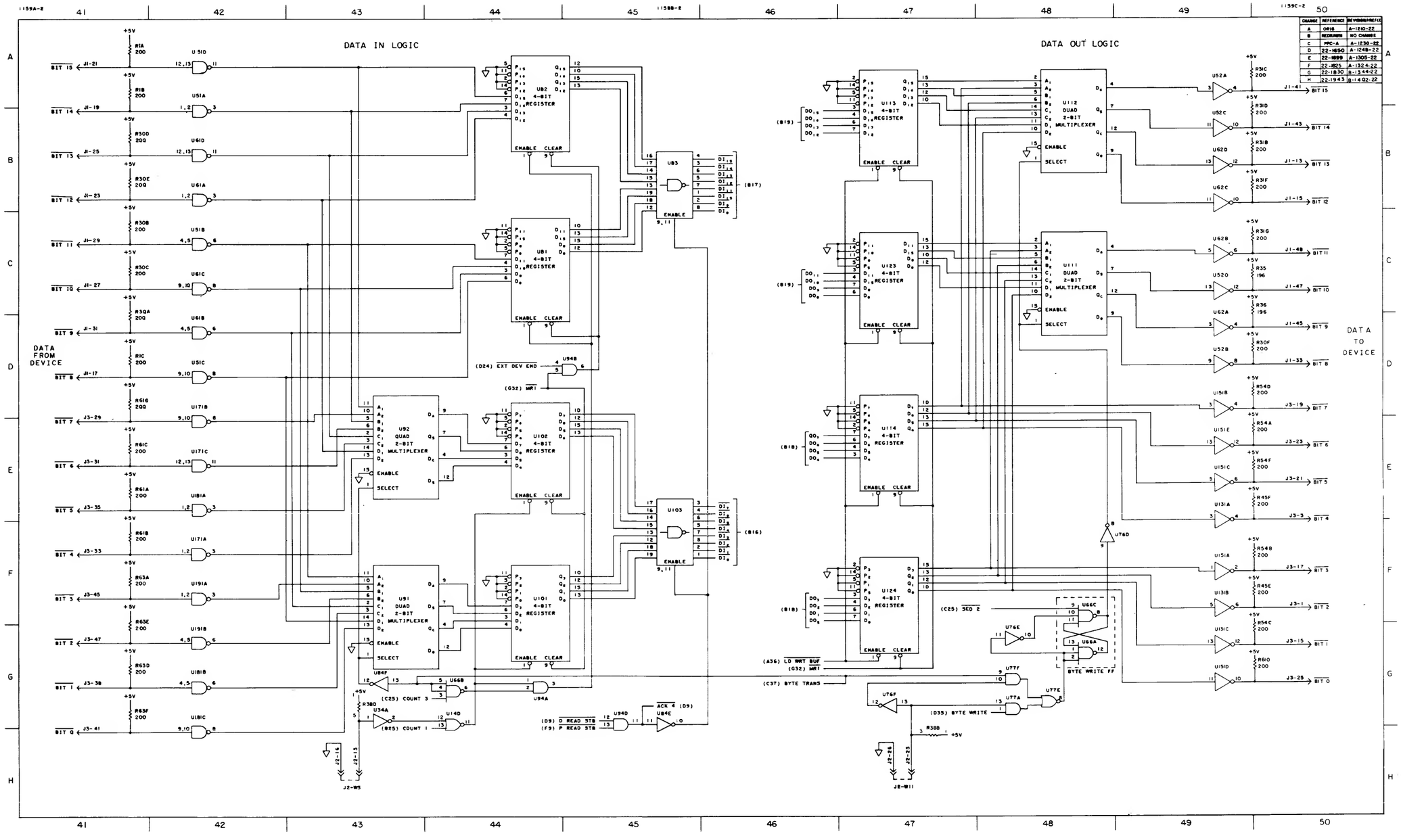

CHANGE	REFERENCE	REVISION/PREFIX
A	OR18	A-1210-22
B	REDRAWN	NO CHANGE
C	PPC-A	A-1230-22
D	22-1650	A-1248-22
E	22-1699	A-1305-22
F	22-1825	A-1324-22
G	22-1830	B-1344-22
H	22-1943	B-1402-22

Card Reader Punch Interface PCA, 30050-60008, Sheet 5 of 6

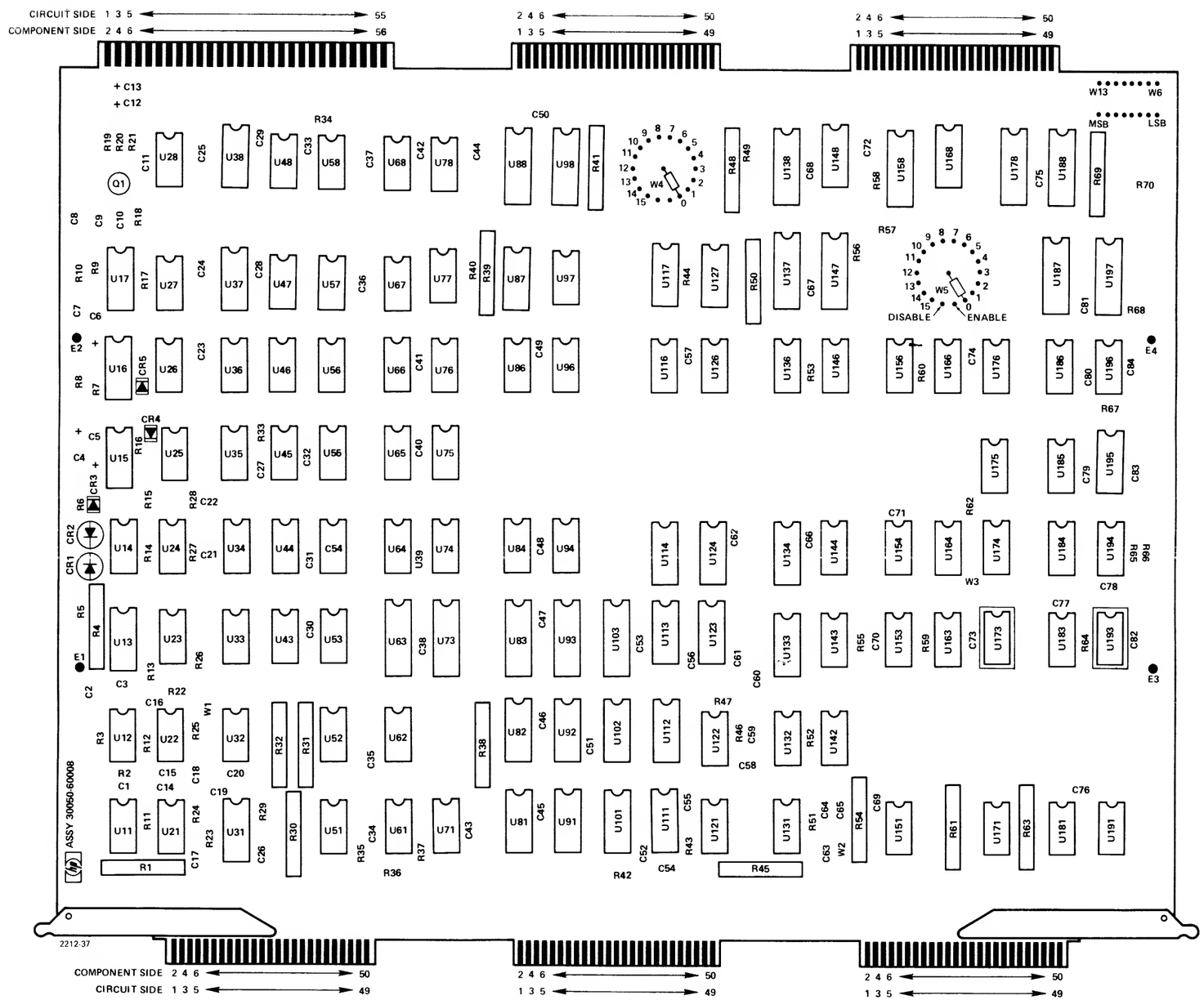

Card Reader Punch Interface PCA, 30050-60008, Sheet 6 of 6

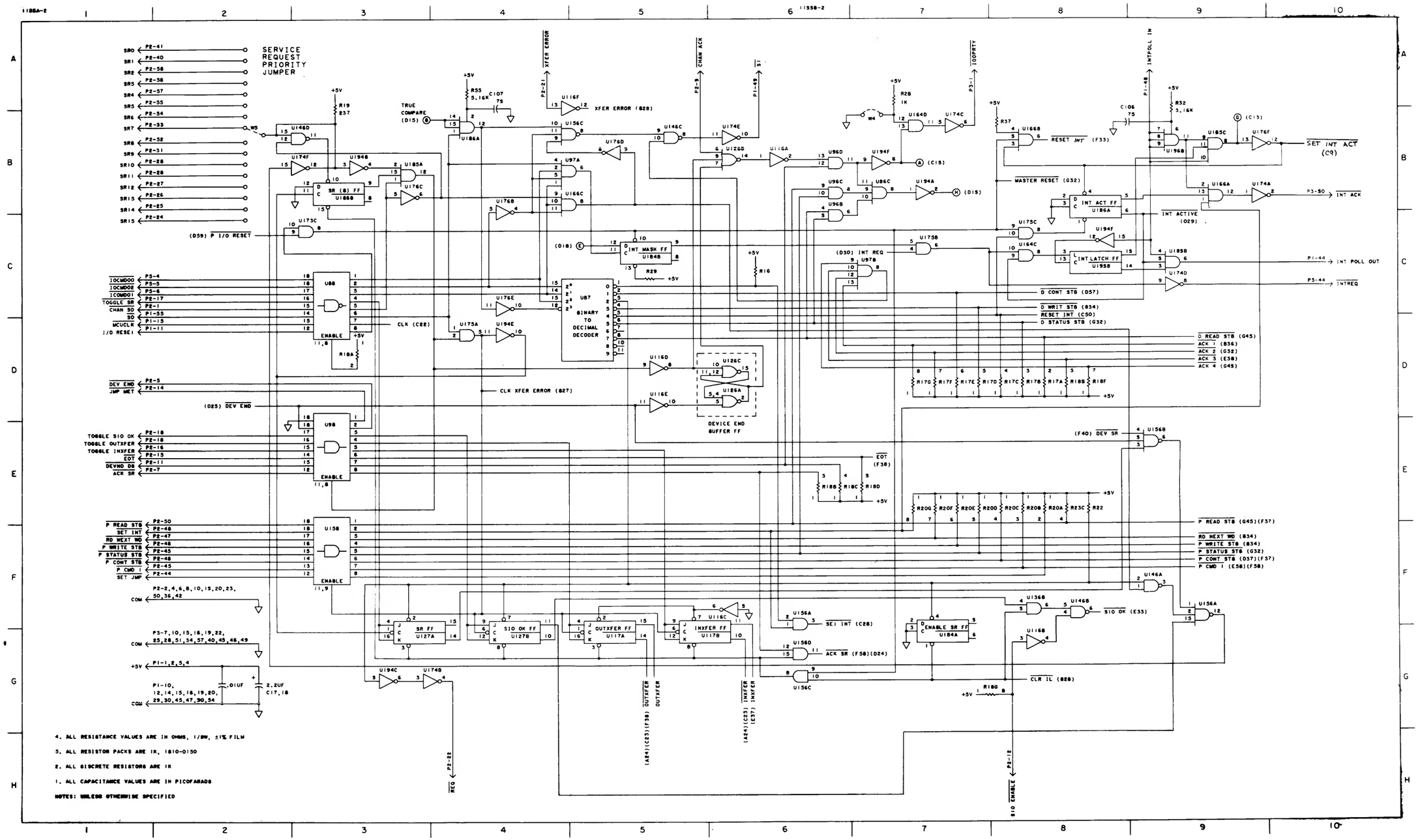

Universal Interface (Diff) PCA, 30051-60001, Sheet 1 of 6

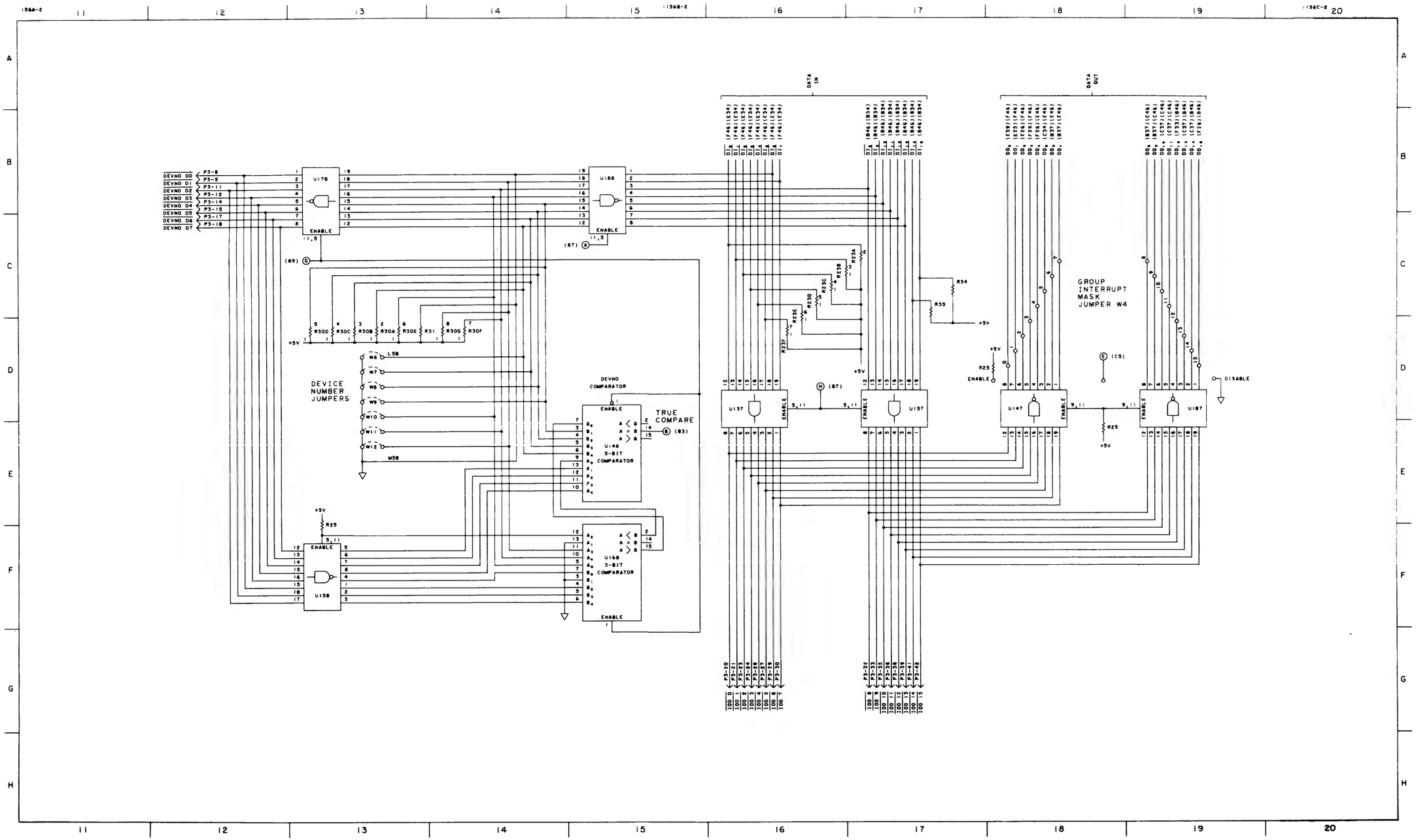

Universal Interface (Diff) PCA, 30051-60001, Sheet 2 of 6

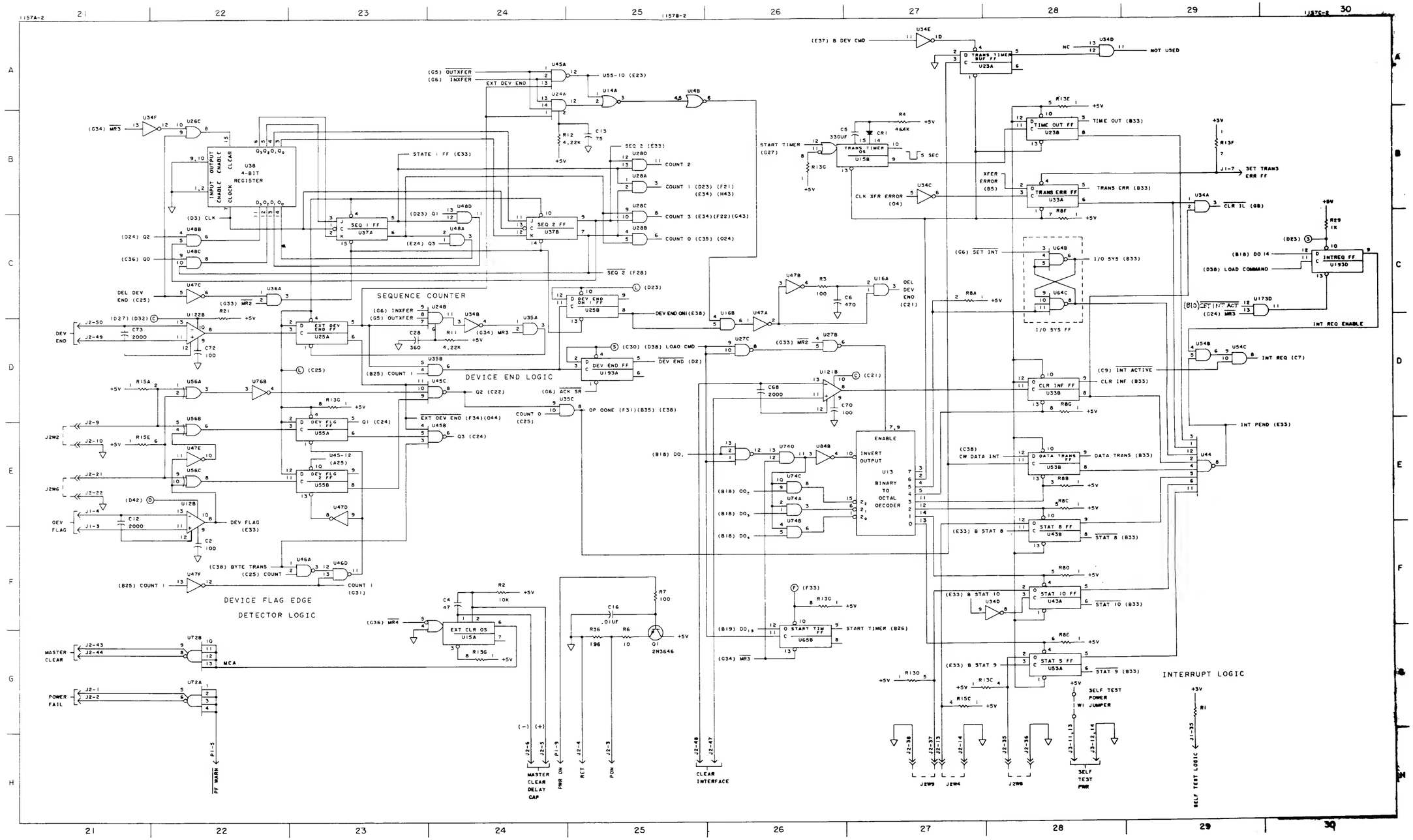

Universal Interface (Diff) PCA, 30051-60001, Sheet 3 of 6

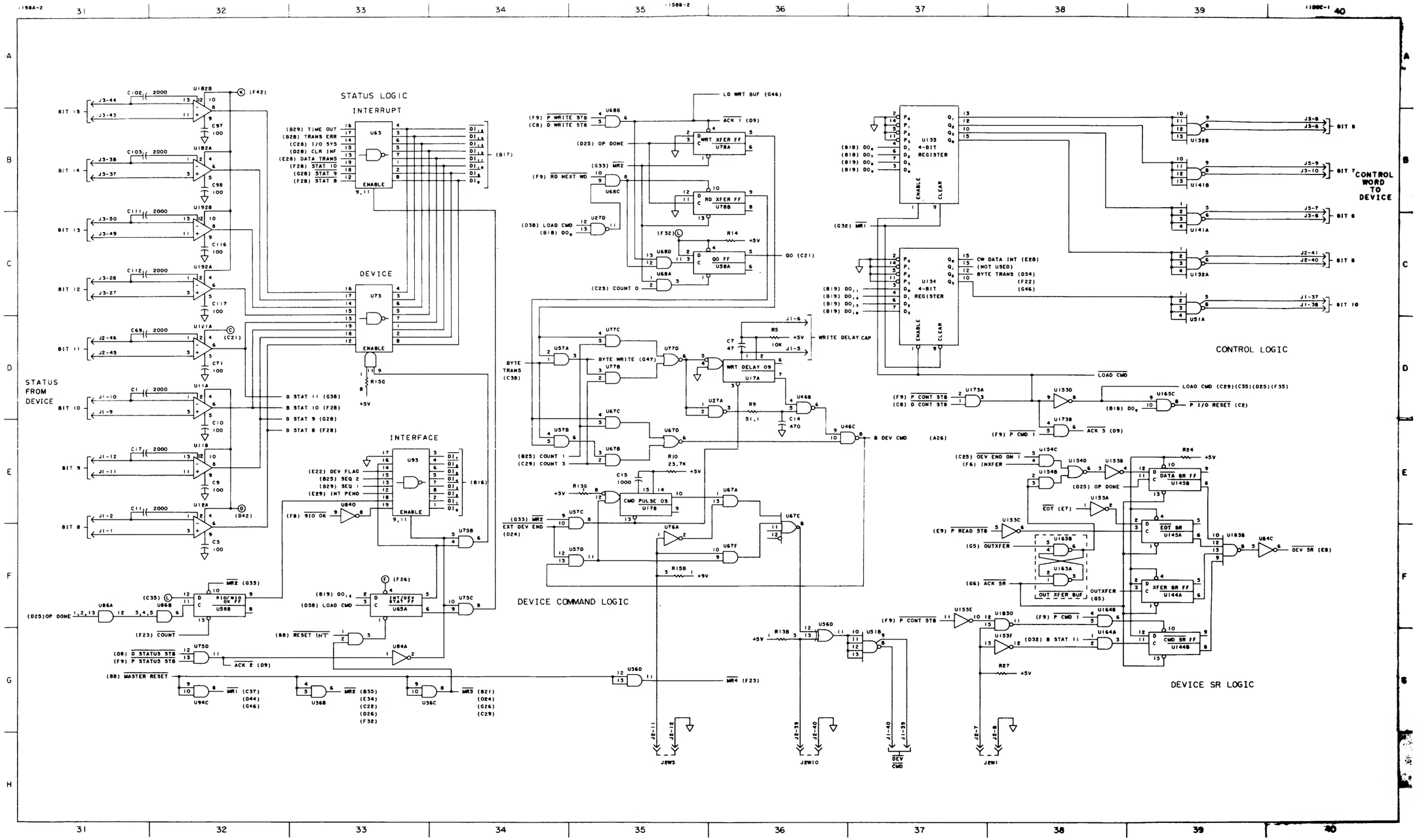

Universal Interface (Diff) PCA, 30051-60001, Sheet 4 of 6

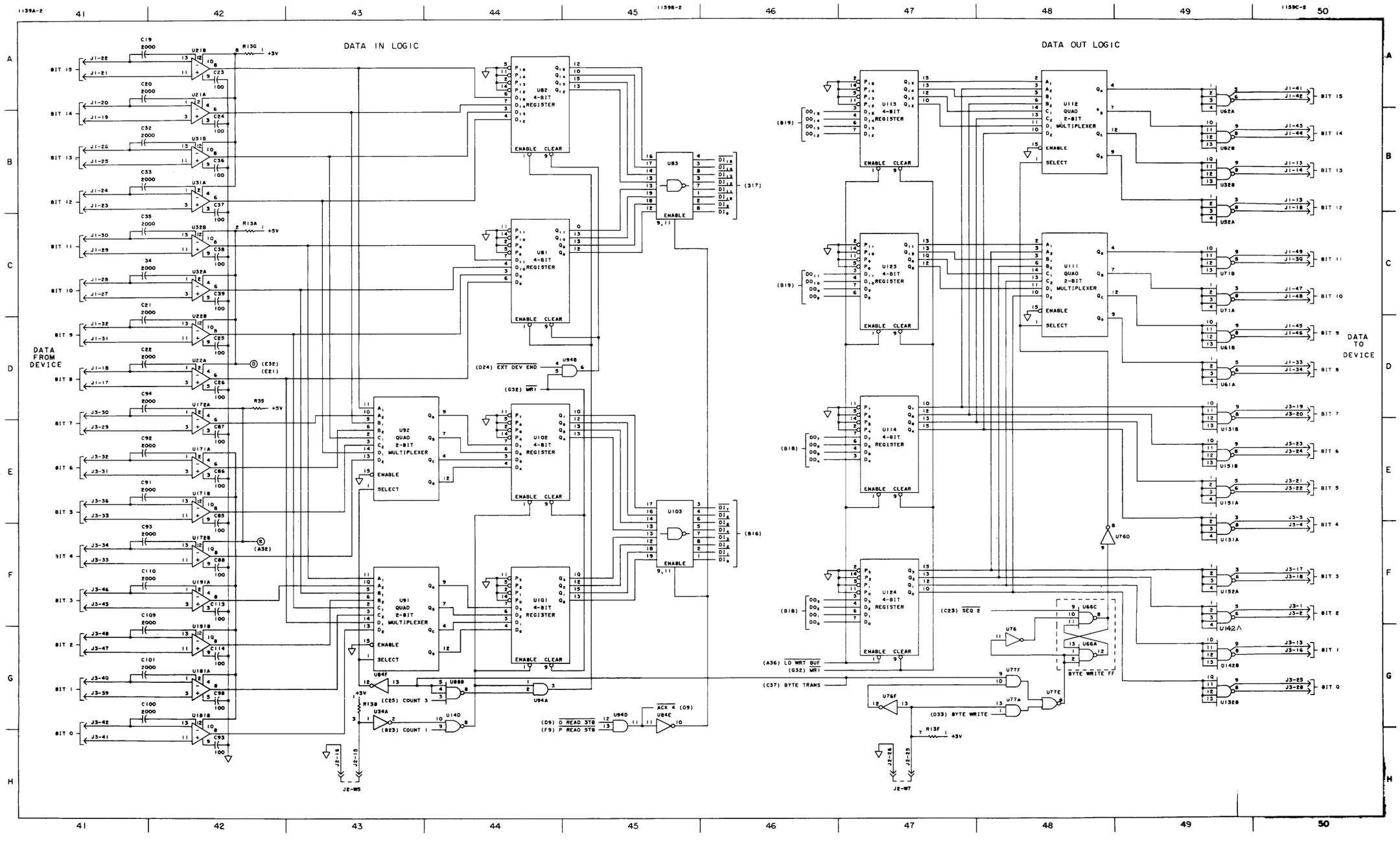

Universal Interface (Diff) PCA, 30051-60001, Sheet 5 of 6

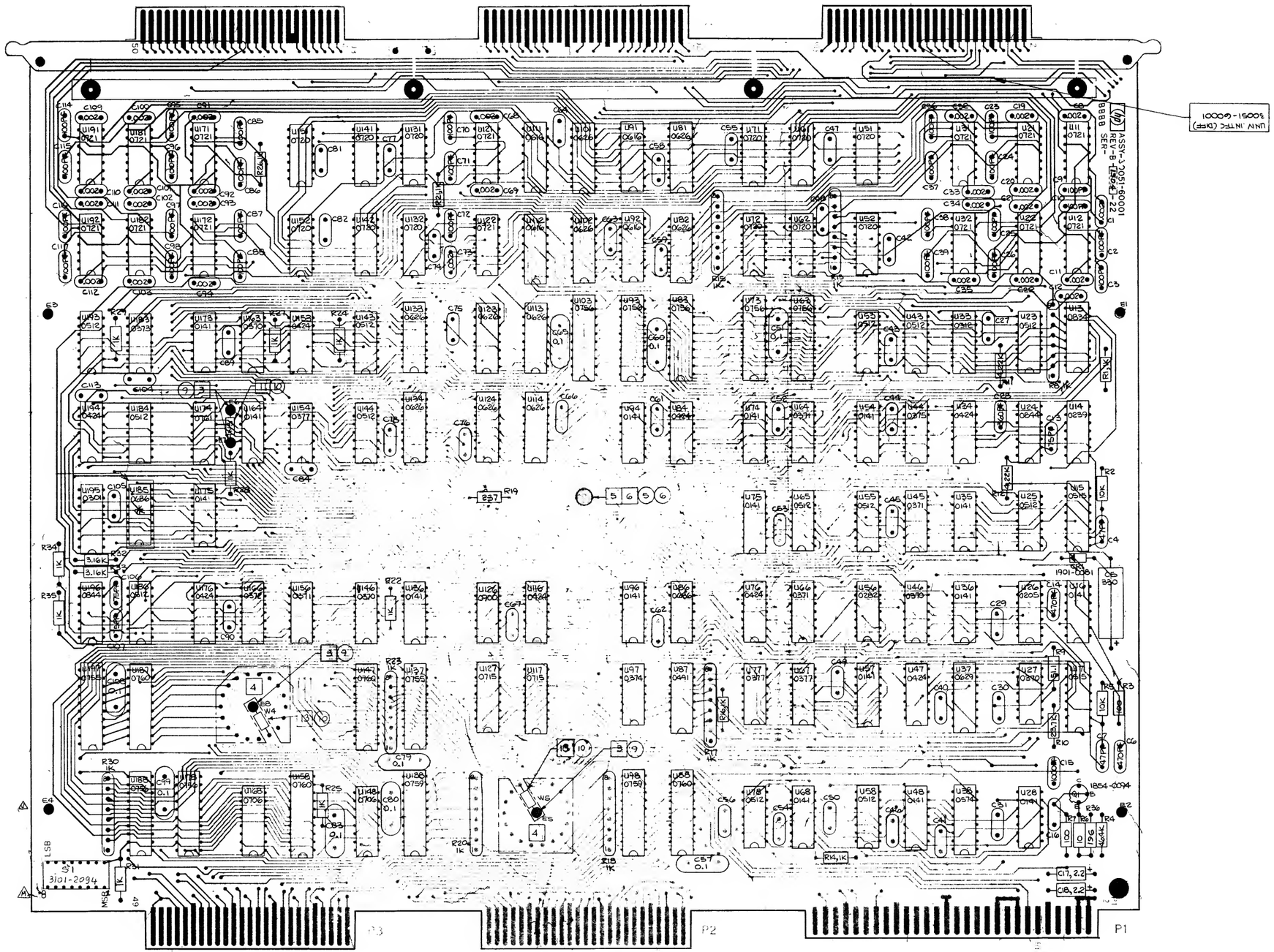

NOTES: UNLESS OTHERWISE SPECIFIED

1. RESISTANCE VALUES ARE IN OHMS ±1%, 1/4W
   CAPACITANCE VALUES ARE IN MICROFARADS
   CAPACITORS ARE .01 CER DISC.
   ICS ARE 1820-

Universal Interface (Diff) PCA, 30051-60001, Sheet 6 of 6

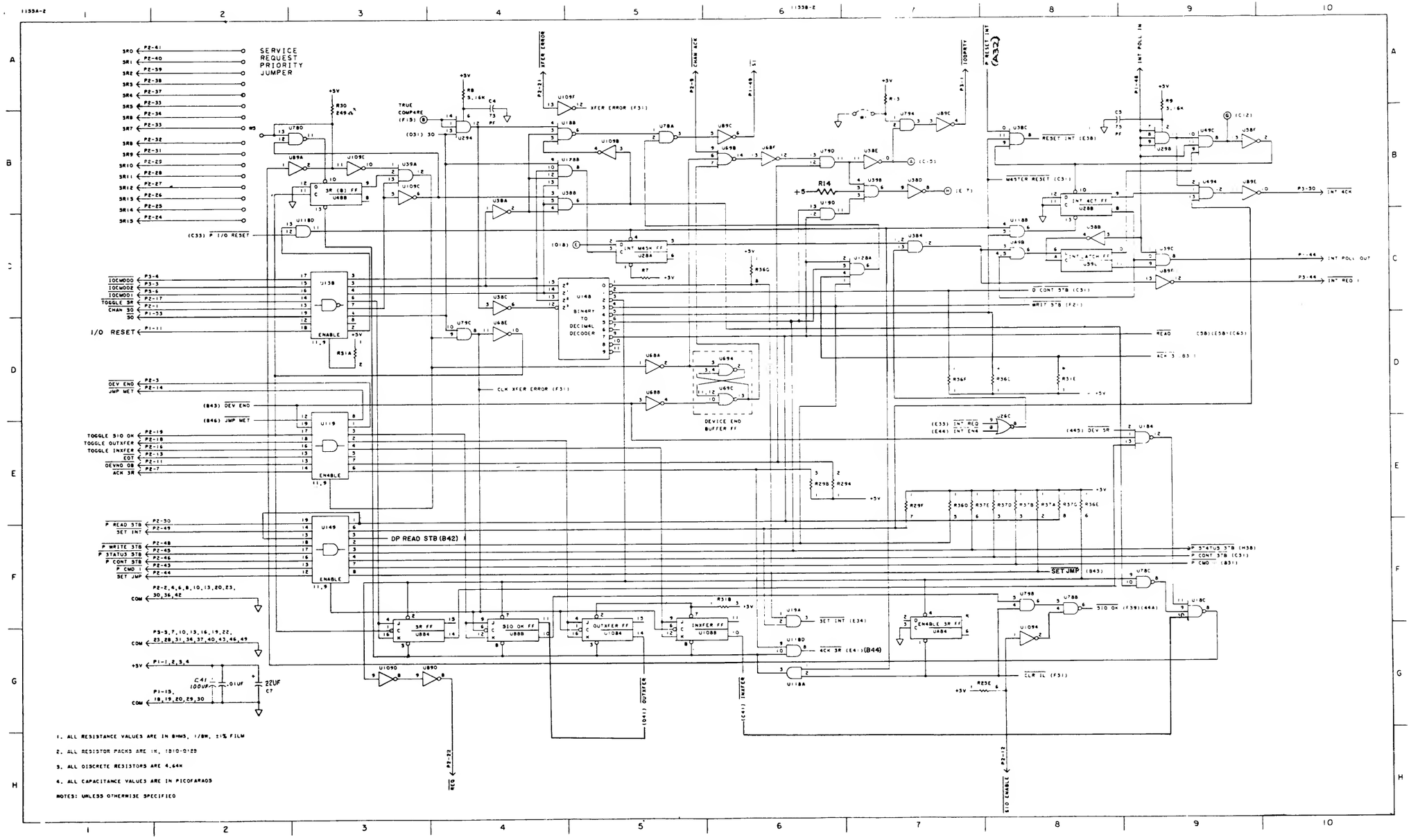

SSLC PCA, 30055-60001, Sheet 1 of 8

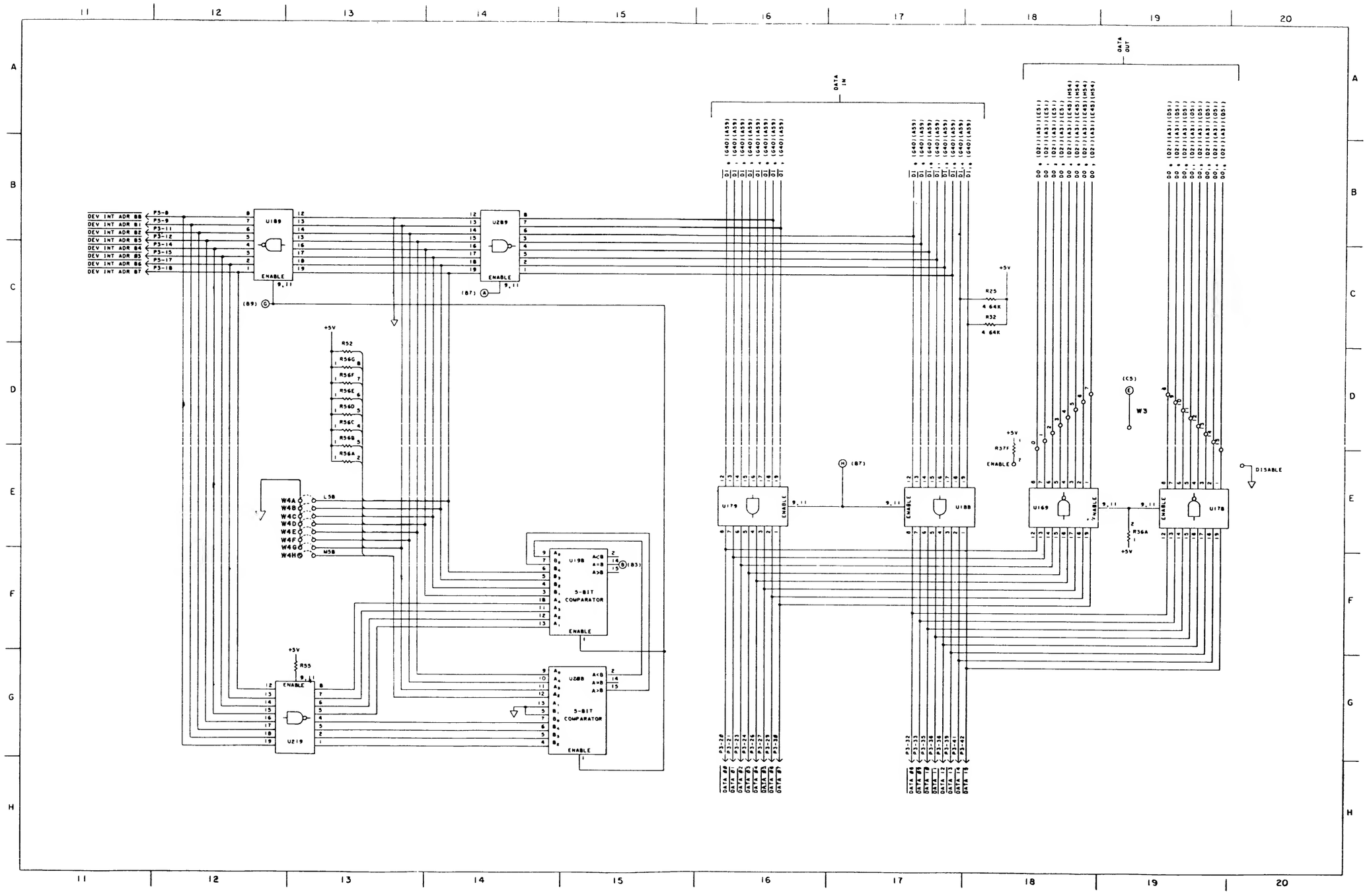

SSLC PCA, 30055-60001, Sheet 2 of 8

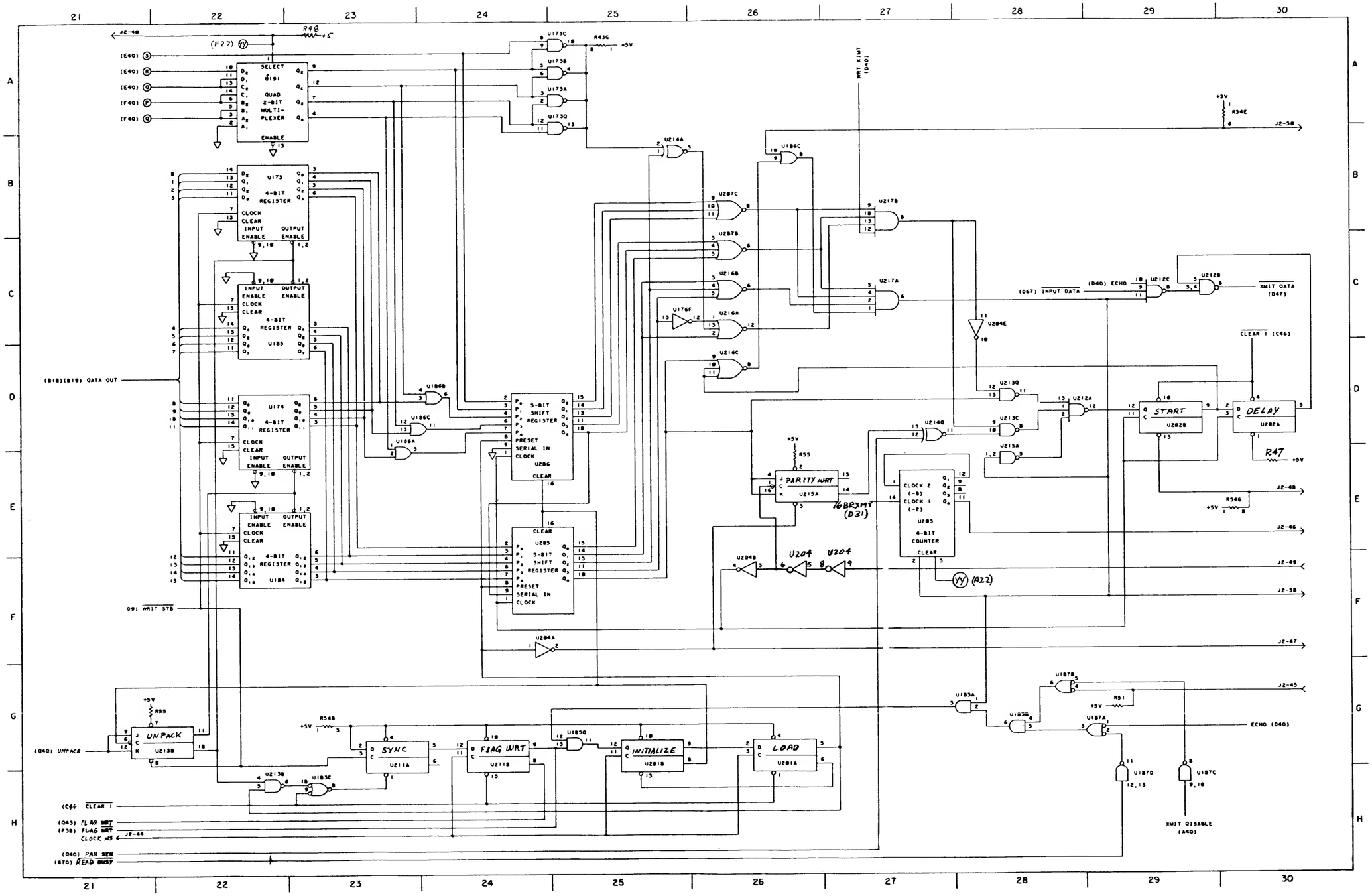

SSLC PCA, 30055-60001, Sheet 3 of 8

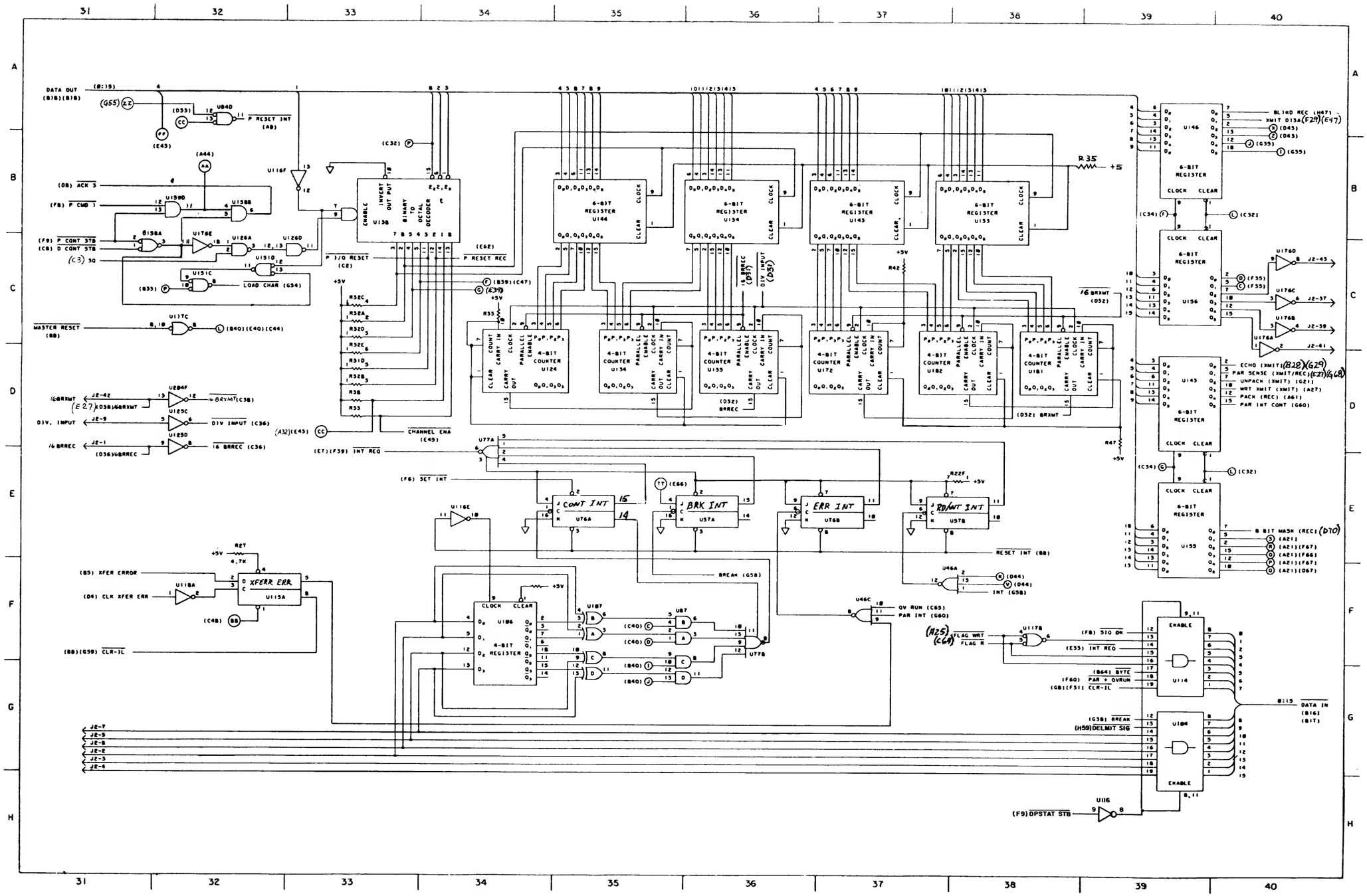

SSLC PCA, 30055-60001, Sheet 4 of 8

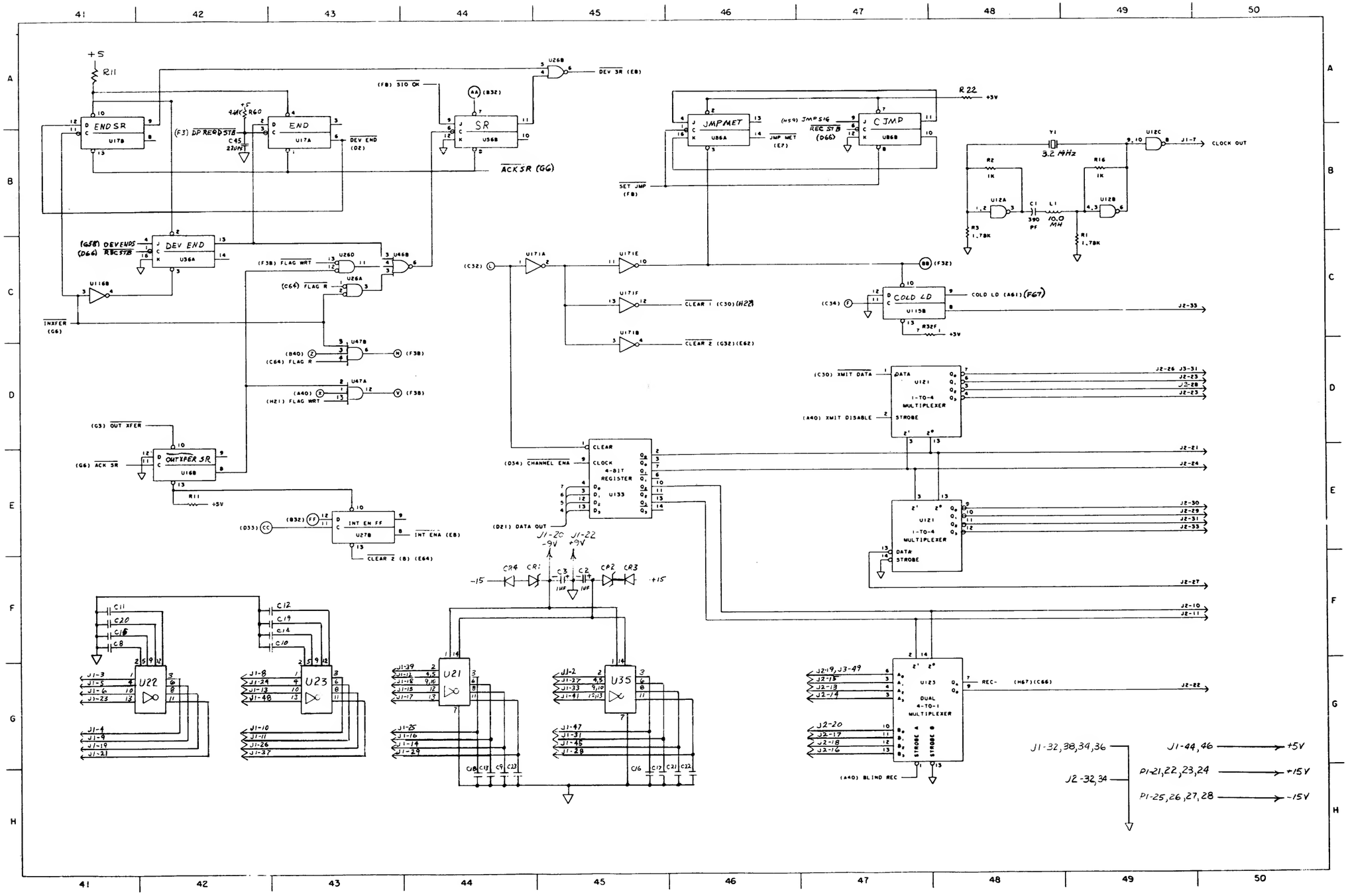

SSLC PCA, 30055-60001, Sheet 5 of 8

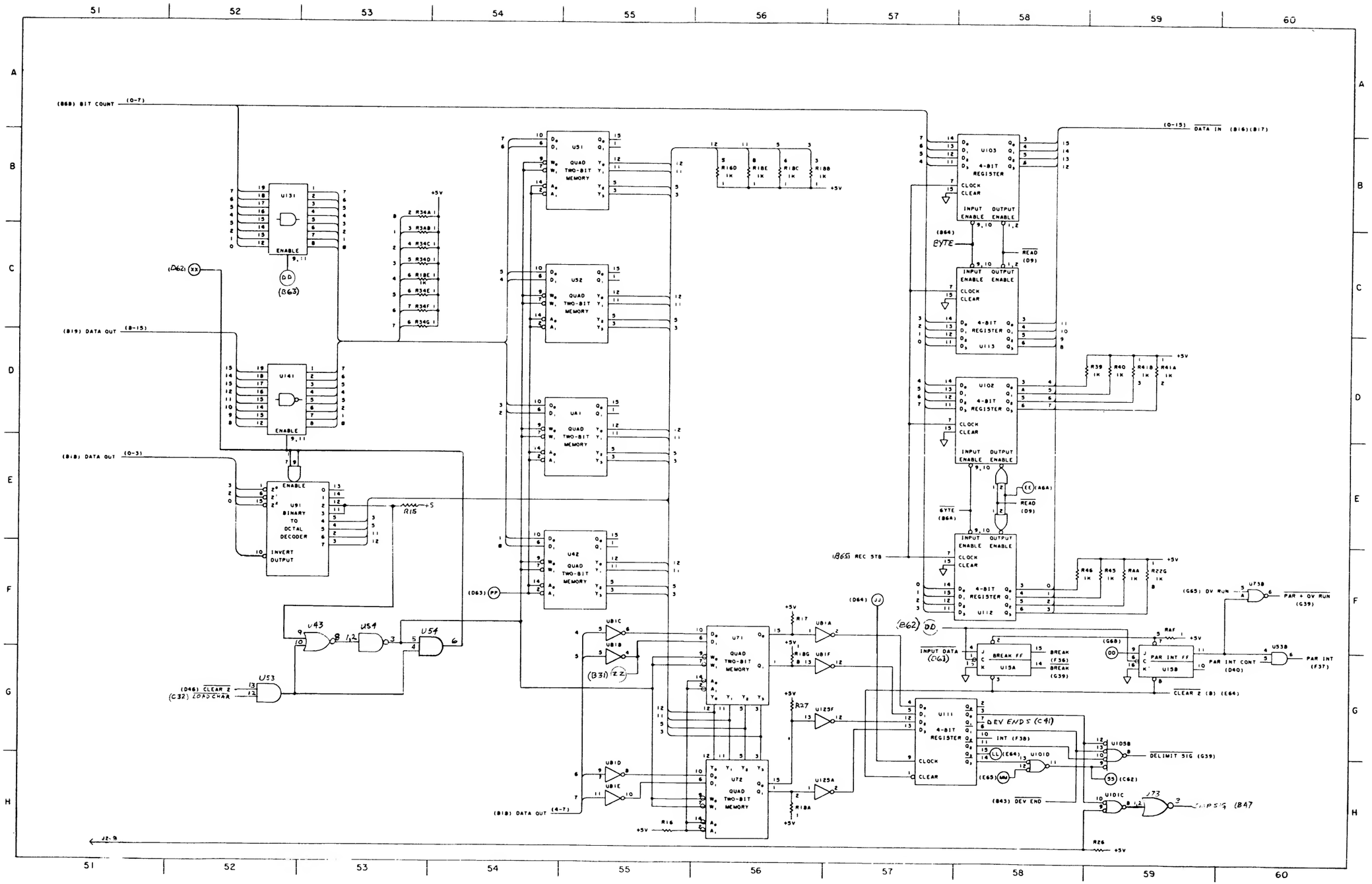

SSLC PCA, 30055-60001, Sheet 6 of 8

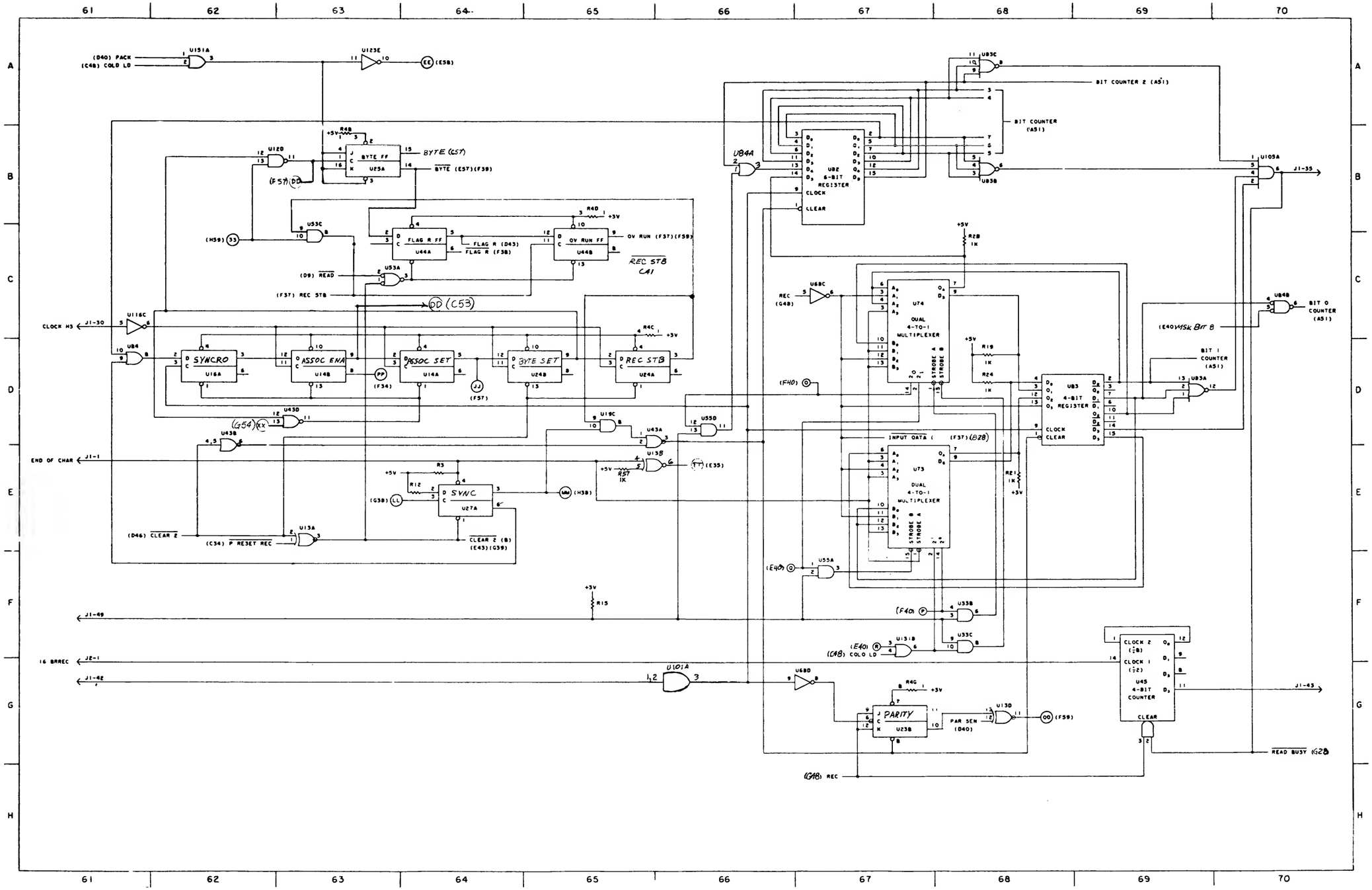

SSLC PCA, 30055-60001, Sheet 7 of 8

A	AS ISSUED	[illegible]	[illegible]
B	PCO# 22-2238. PILOT RUN MODIFICATION. CHG. NOTE 6, ADD. NOTES 9 & ITEM 12; ITEM 6 QTY WAS 4. DATE CODE WAS A-1550-22 [illegible]	GD [illegible]	10-25-74
C	ADDED [illegible]	[illegible]	[illegible]
D	PCO [illegible]. REVERSED POLARITY ON C2. DATECODE WAS [illegible]	[illegible]	

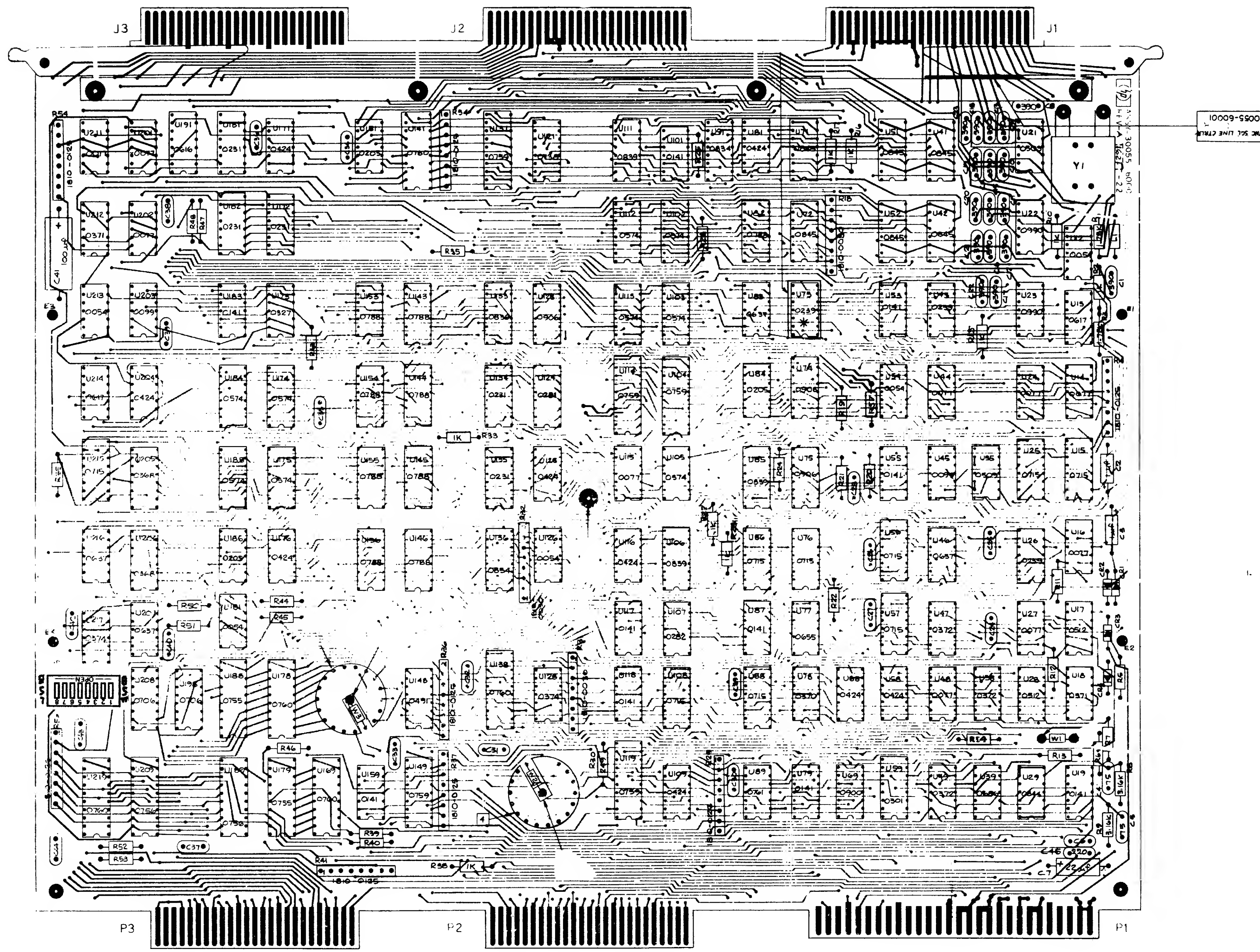

1. UNLESS OTHERWISE SPECIFIED:
   ALL RESISTANCE IN OHMS
   ALL RESISTORS 4.64K, 1/8 W, % MF
   ALL CAPACITANCE IN PF
   ALL CAPACITORS .01 µF
   ALL DIODES 1901-0040
   ALL IC'S 1820-

SSLC PCA, 30055-60001, Sheet 8 of 8

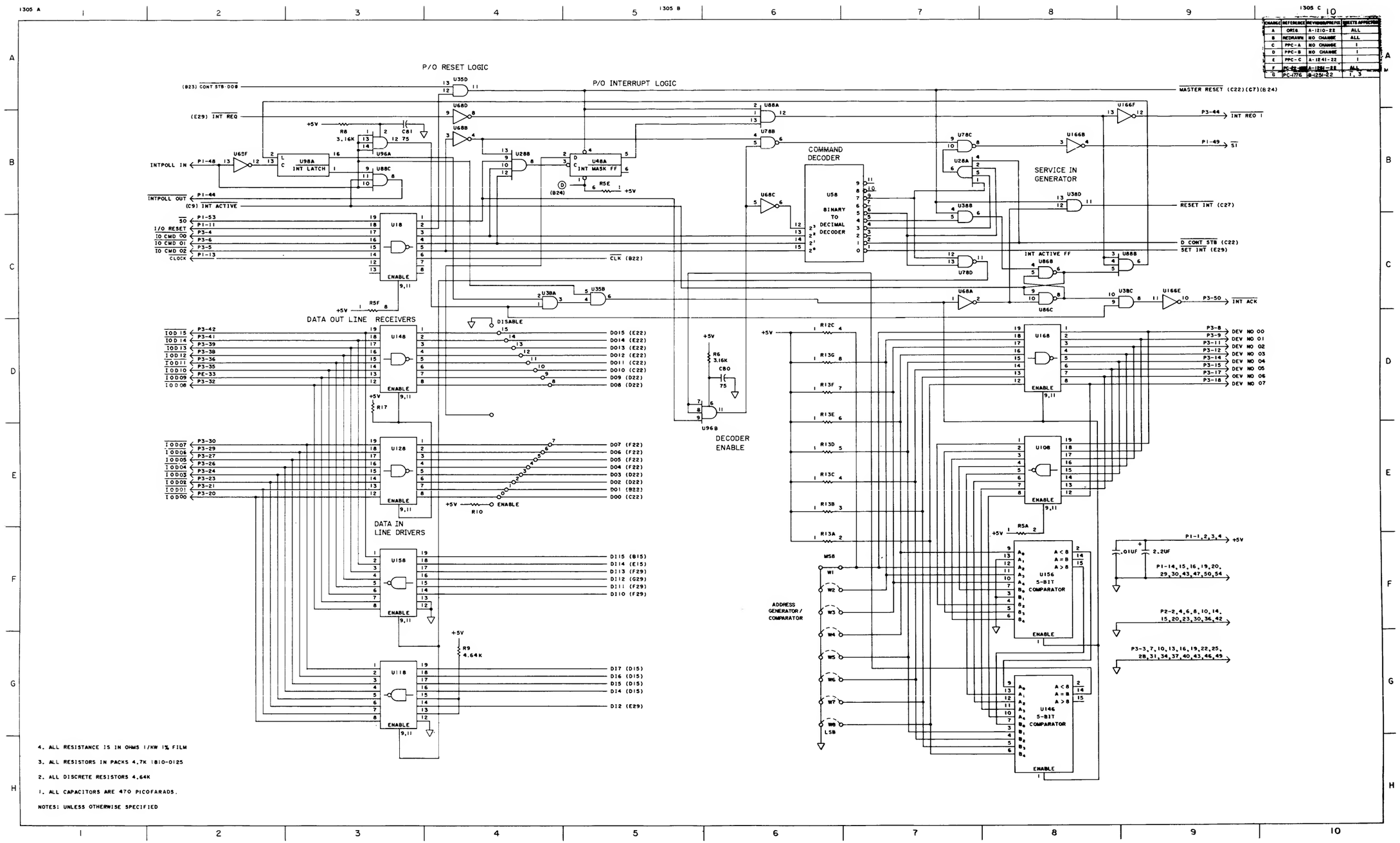

CHANGE	REFERENCE	REVISION/PREFIX	SHEETS AFFECTED
A	ORIG	A-1210-22	ALL
B	REDRAWN	NO CHANGE	ALL
C	PPC-A	NO CHANGE	1
D	PPC-B	NO CHANGE	1
E	PPC-C	A-1241-22	1
F	PC-[illegible]	A-1251-22	ALL
G	PC-1776	B-1251-22	1, 3

4. ALL RESISTANCE IS IN OHMS 1/KW 1% FILM

3. ALL RESISTORS IN PACKS 4.7K 1810-0125

2. ALL DISCRETE RESISTORS 4.64K

1. ALL CAPACITORS ARE 470 PICOFARADS.

NOTES: UNLESS OTHERWISE SPECIFIED

Terminal Control Interface PCA, 30061-60001, Sheet 1 of 4

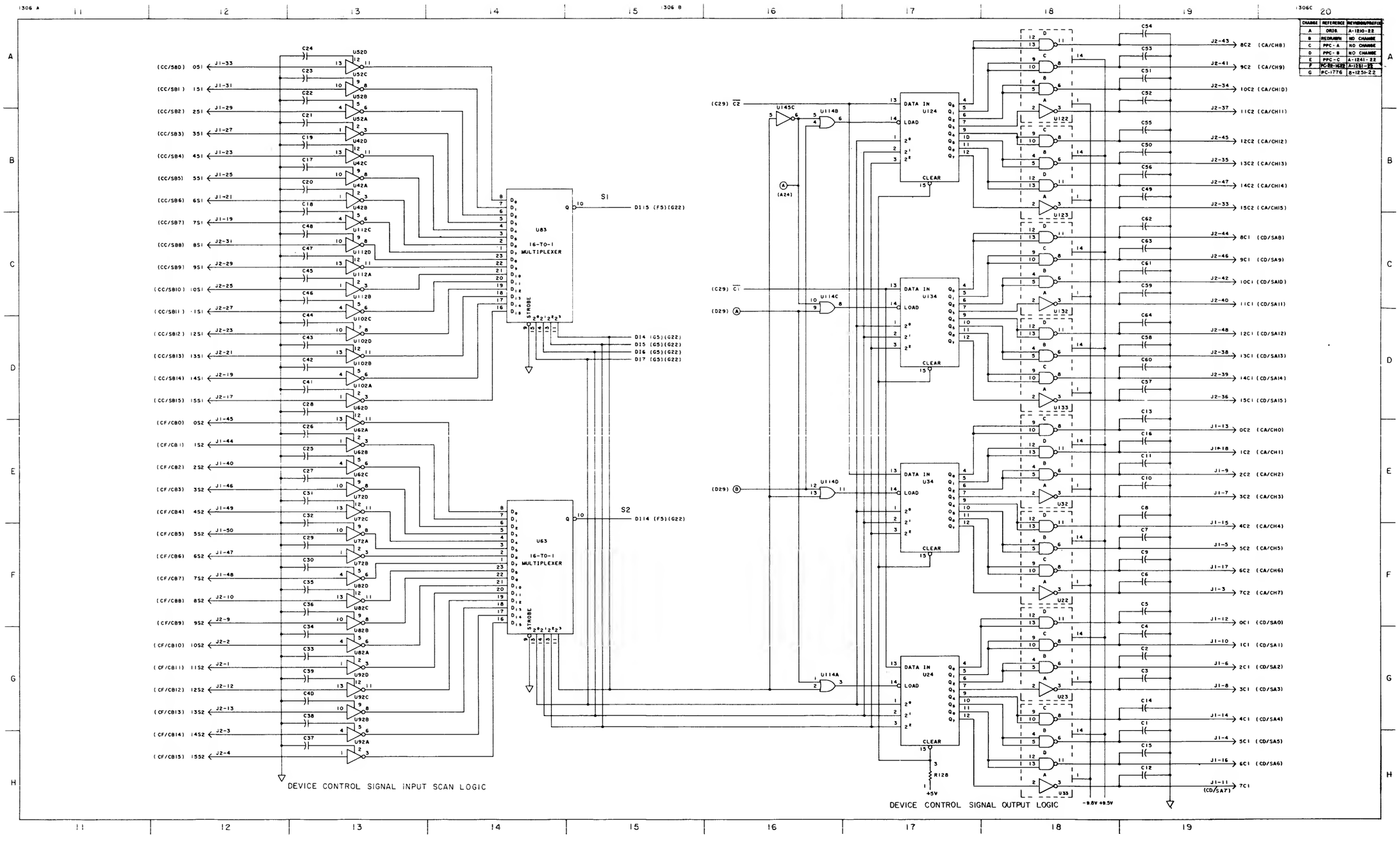

CHANGE	REFERENCE	REVISION/PREFIX
A	ORIG.	A-1210-22
B	REDRAWN	NO CHANGE
C	PPC-A	NO CHANGE
D	PPC-B	NO CHANGE
E	PPC-C	A-1241-22
F	PC-22-1532	A-1251-22
G	PC-1776	B-1251-22

Terminal Control Interface PCA, 30061-60001, Sheet 2 of 4

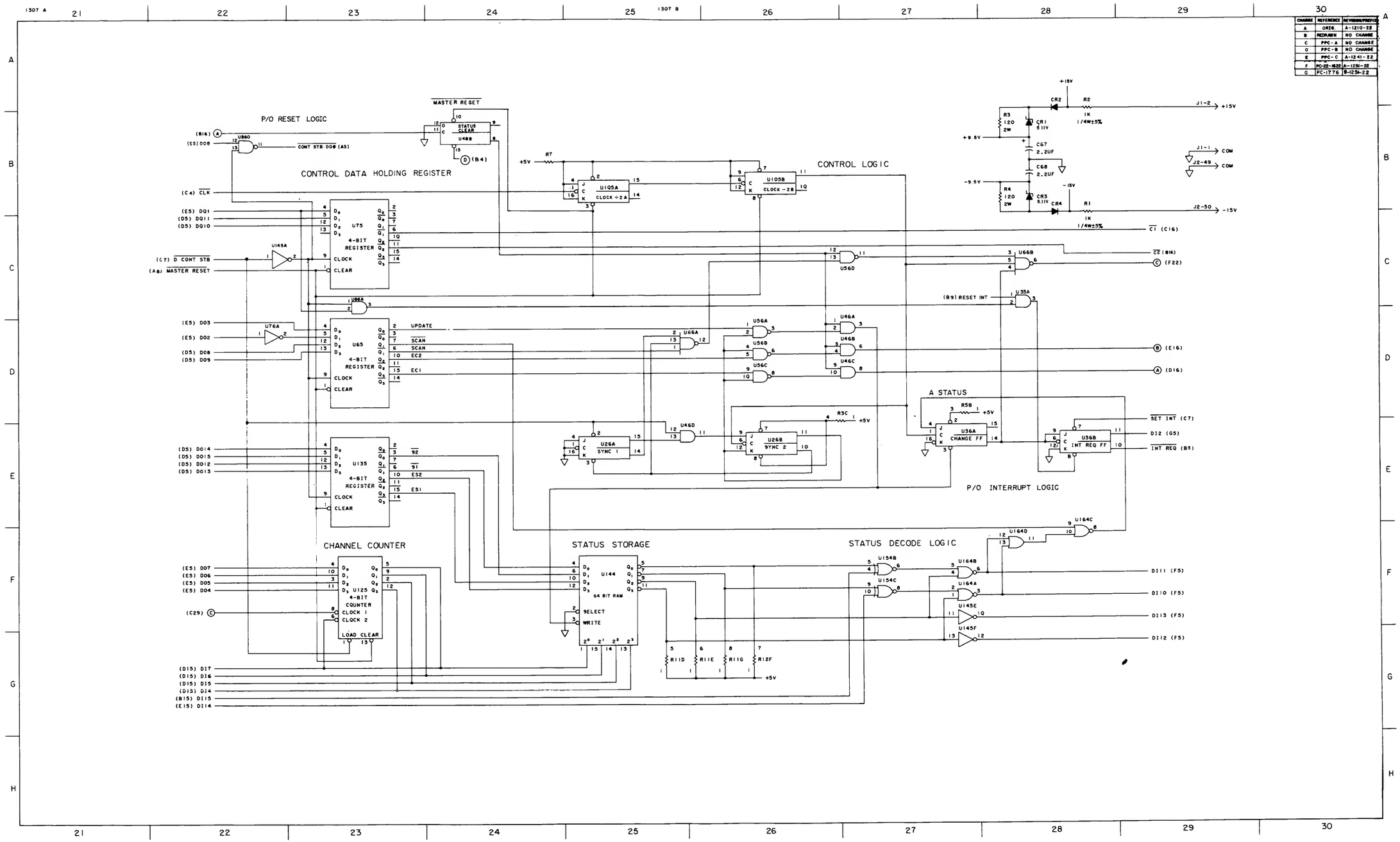

CHANGE	REFERENCE	REVISION/PREFIX
A	ORIG.	A-1210-22
B	RECURWN	NO CHANGE
C	PPC-A	NO CHANGE
D	PPC-B	NO CHANGE
E	PPC-C	A-1241-22
F	PC-22-1622	A-1254-22
G	PC-1776	B-1254-22

Terminal Control Interface PCA, 30061-60001, Sheet 3 of 4

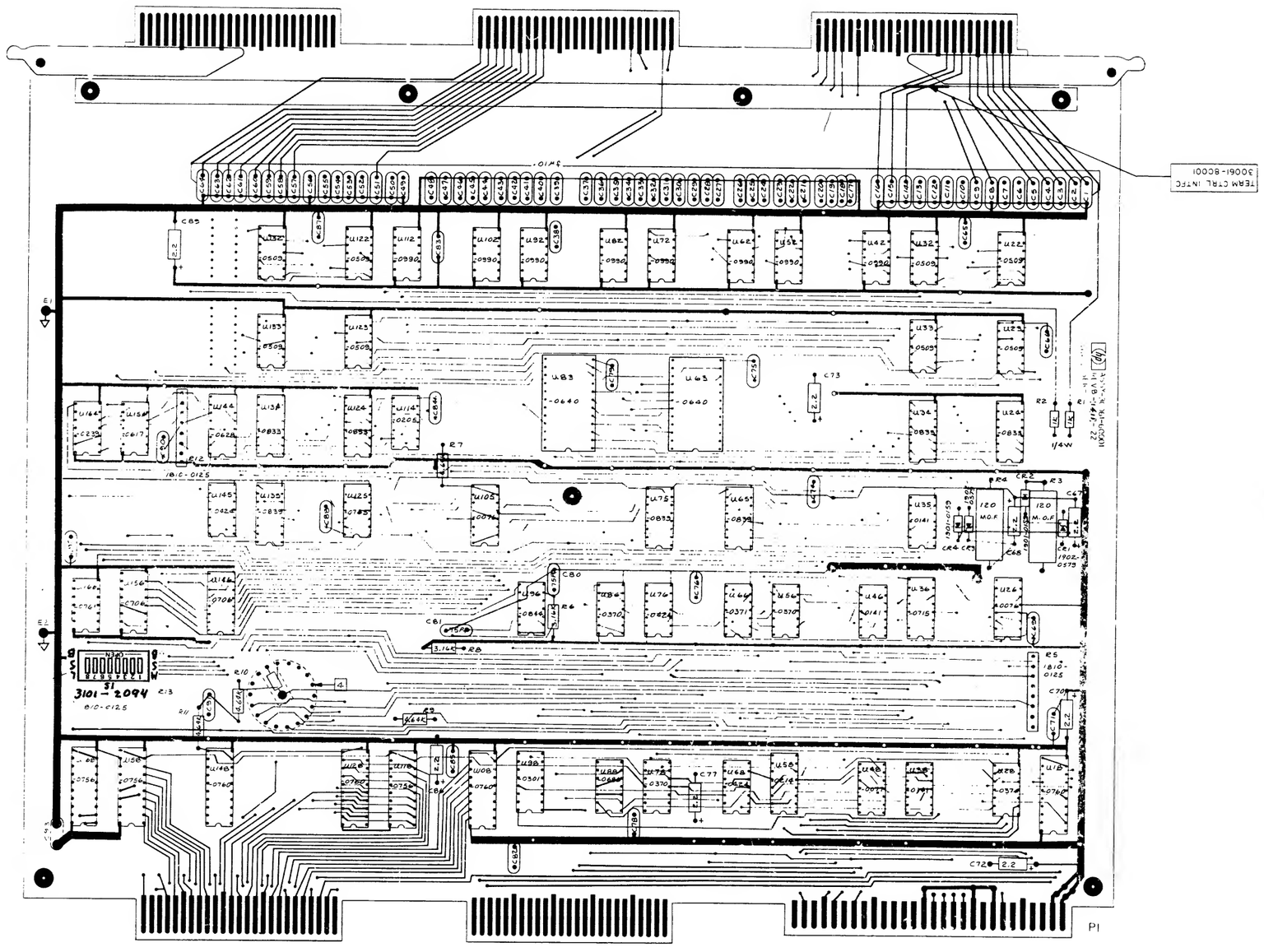

SYM	REVISIONS	APPROVED	DATE
A	AS ISSUED		
B	PER ECO 3127 PCBA WAS ASSY. ECO 3128 ISSUED. ADD 2-2.2 PF, 1KV CER CAP C.O.E.C.G. DATE CODE WAS 151.		1/19/77
C	DATE CODE WAS 1601 22 PER PC22-2187		7-23-74
D	ADD 1/4W R1 & R2 PER ECO 3-4-75 ADD 1/4W R3 & R4 AND NOTE 3		11/24/75

NOTES:

1. UNLESS OTHERWISE NOTED:
   ALL RESISTANCE IN OHMS ±5%
   ALL RESISTORS .5W
   ALL CAPACITANCE IN MICRO-FARADS
   ALL CAPACITORS 50WV CERAMIC DISC
   ALL I.C. ARE 1820-

Terminal Control Interface PCA, 30061-60001, Sheet 4 of 4

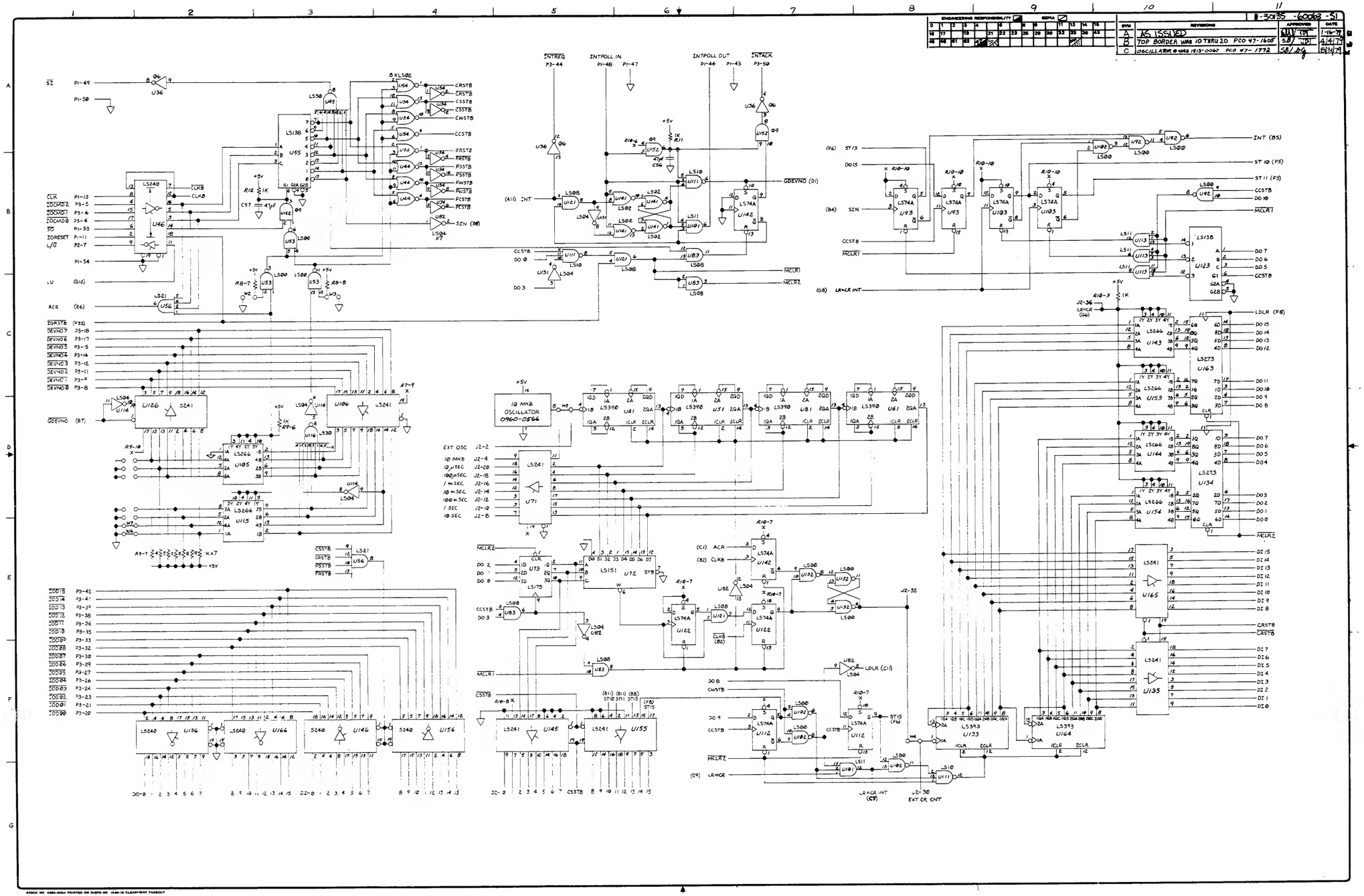

32435A ONLY Sys CLK FLI, 30135-60063, Sheet 1 of 3

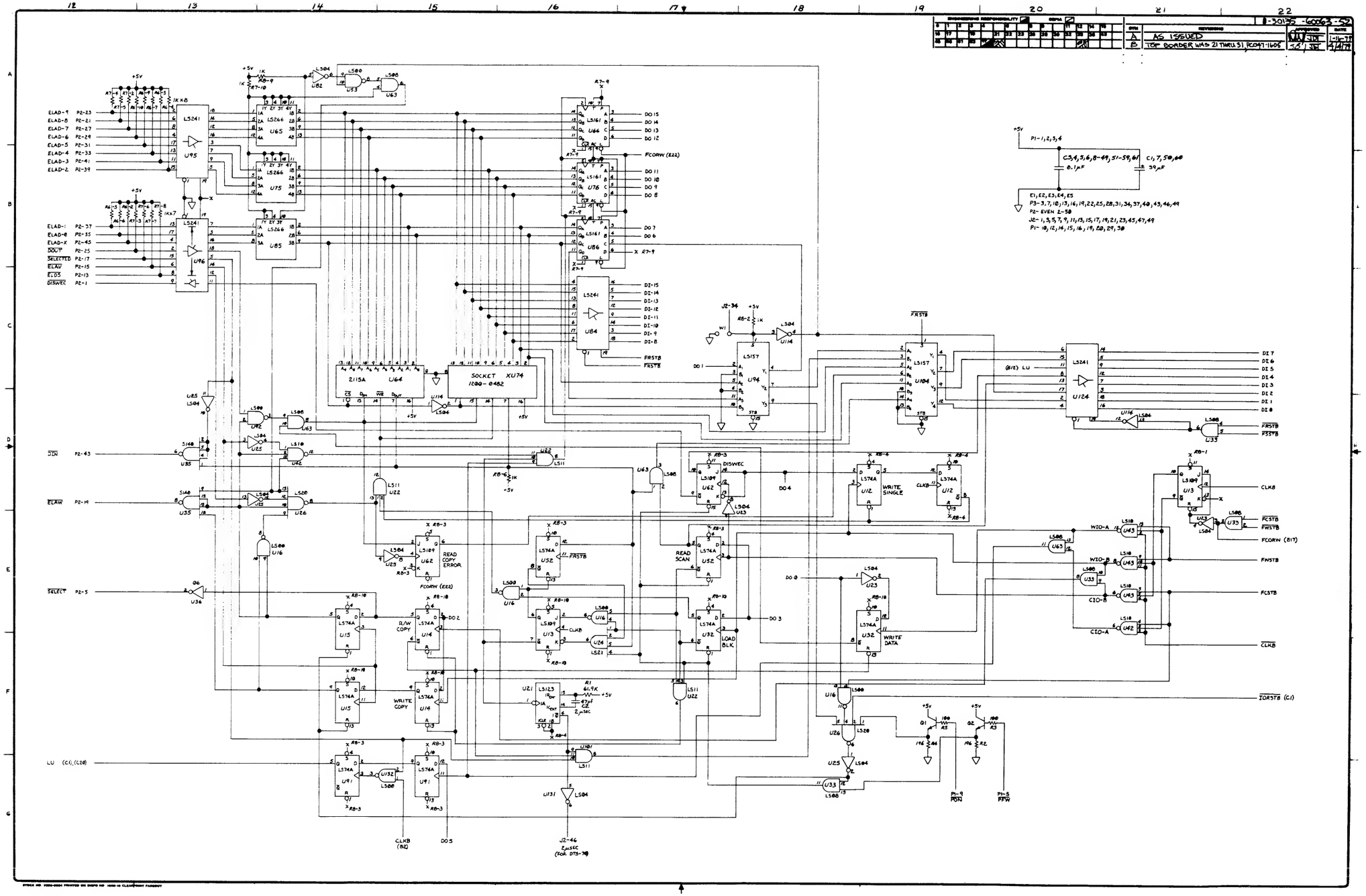

32435A ONLY Sys CLK FLI, 30135-60063, Sheet 2 of 3

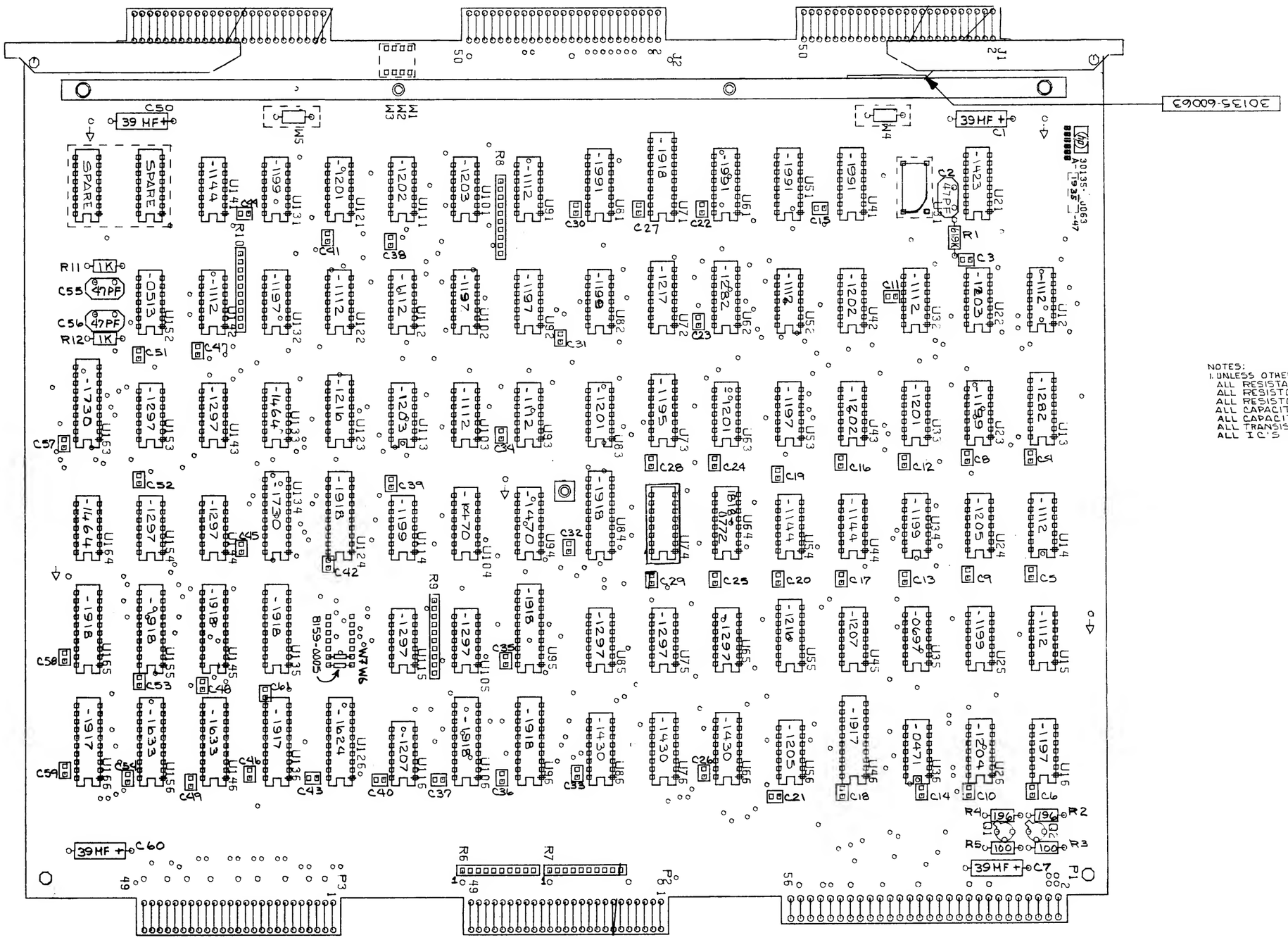

NOTES:
1. UNLESS OTHERWISE SPECIFIED:
ALL RESISTANCE IS IN OHMS
ALL RESISTORS ARE 1/8 W, 1%
ALL RESISTOR NETWORKS ARE 1810-0275
ALL CAPACITANCE IN MICROFARADS
ALL CAPACITORS ARE .1 MF
ALL TRANSISTORS ARE 1854-0019
ALL IC'S ARE 1820-

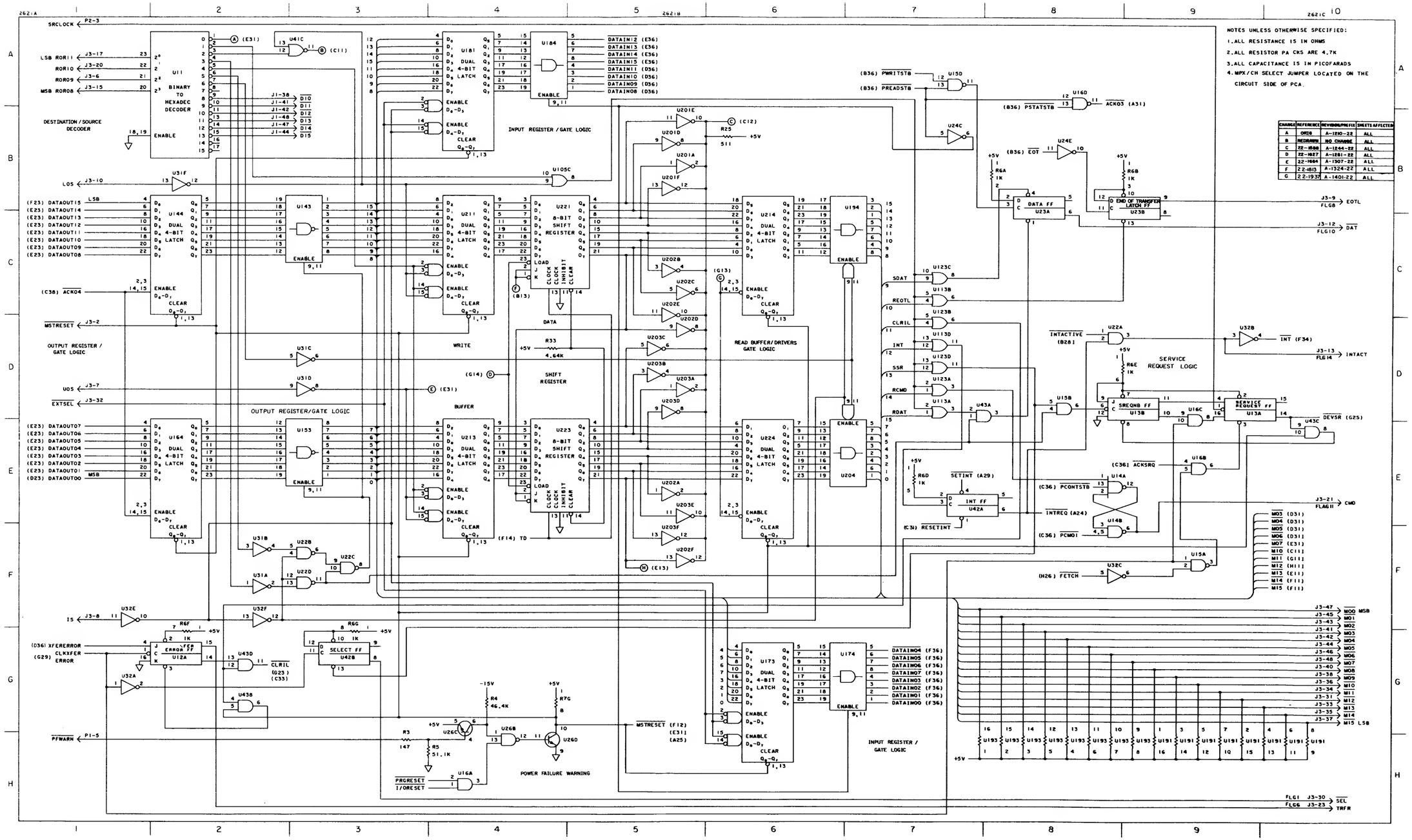

CHANGE	REFERENCE	REVISION/PREFIX	SHEETS AFFECTED
A	ORIG	A-1210-22	ALL
B	REDRAWN	NO CHANGE	ALL
C	22-1588	A-1244-22	ALL
D	22-1827	A-1281-22	ALL
E	22-1664	A-1307-22	ALL
F	22-1813	A-1324-22	ALL
G	22-1937	A-1401-22	ALL

Disc File Read/Write PCA, 30202-60001, Sheet 1 of 5

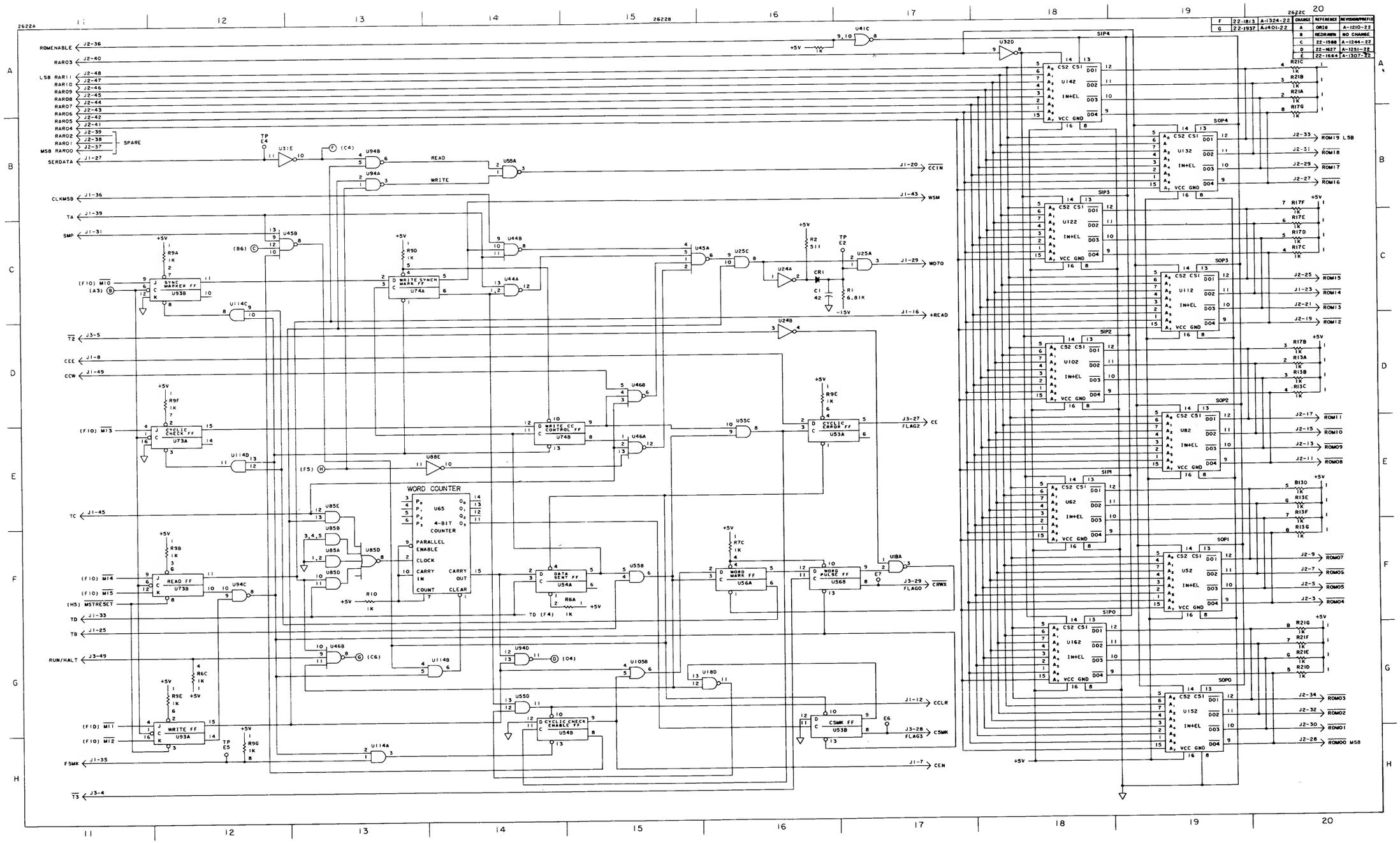

F	22-1813	A-1324-22	CHANGE	REFERENCE	REVISION/PREFIX
G	22-1937	A-1401-22	A	ORIG	A-1210-22
			B	REDRAWN	NO CHANGE
			C	22-1588	A-1244-22
			D	22-1627	A-1251-22
			E	22-1664	A-1307-22

Disc File Read/Write PCA, 30202-60001, Sheet 2 of 5

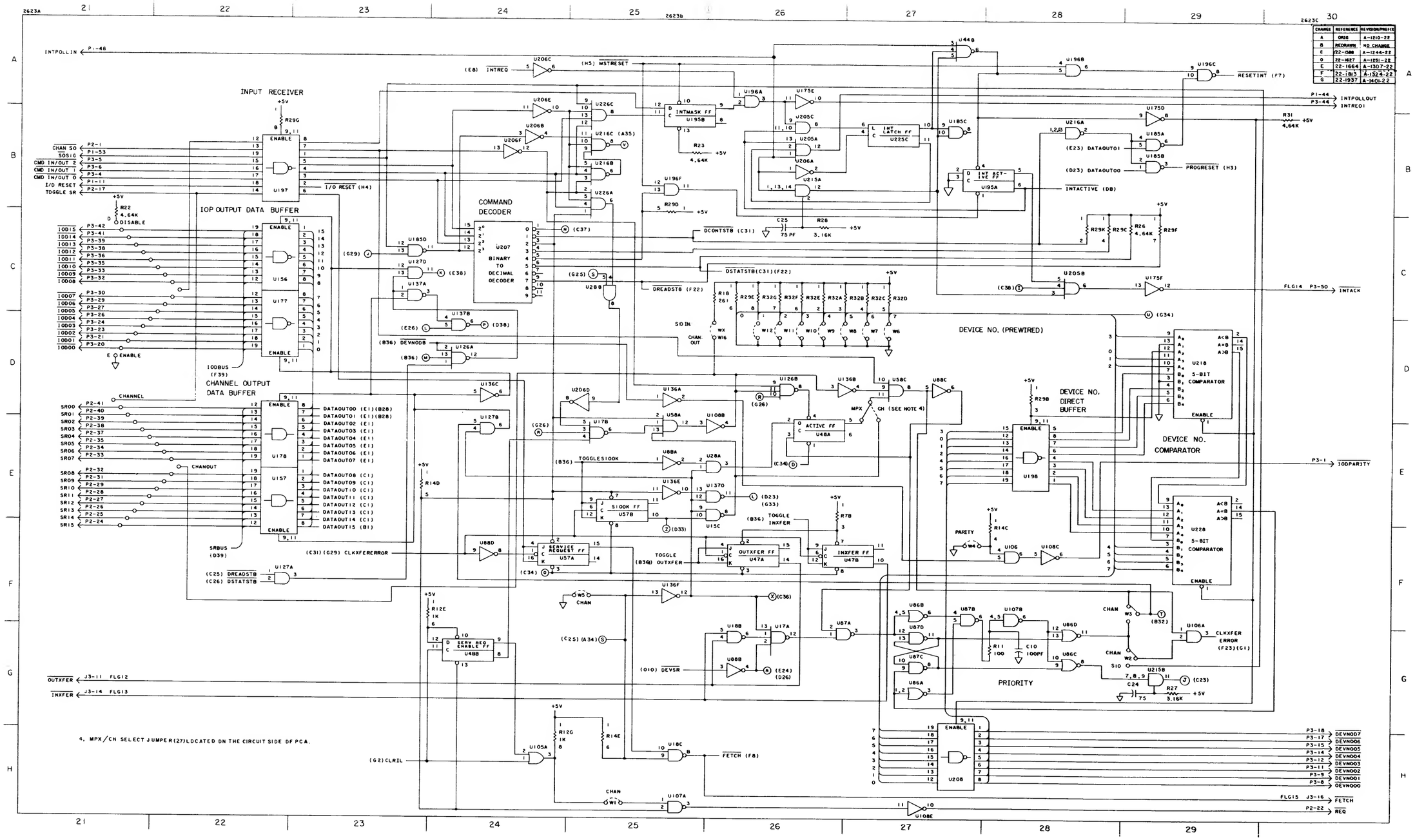

CHANGE	REFERENCE	REVISION/PREFIX
A	ORIG	A-1210-22
B	RECORAWN	NO CHANGE
C	22-1588	A-1244-22
D	22-1687	A-1291-22
E	22-1664	A-1307-22
F	22-1813	A-1324-22
G	22-1937	A-1401-22

Disc File Read/Write PCA, 30202-60001, Sheet 3 of 5

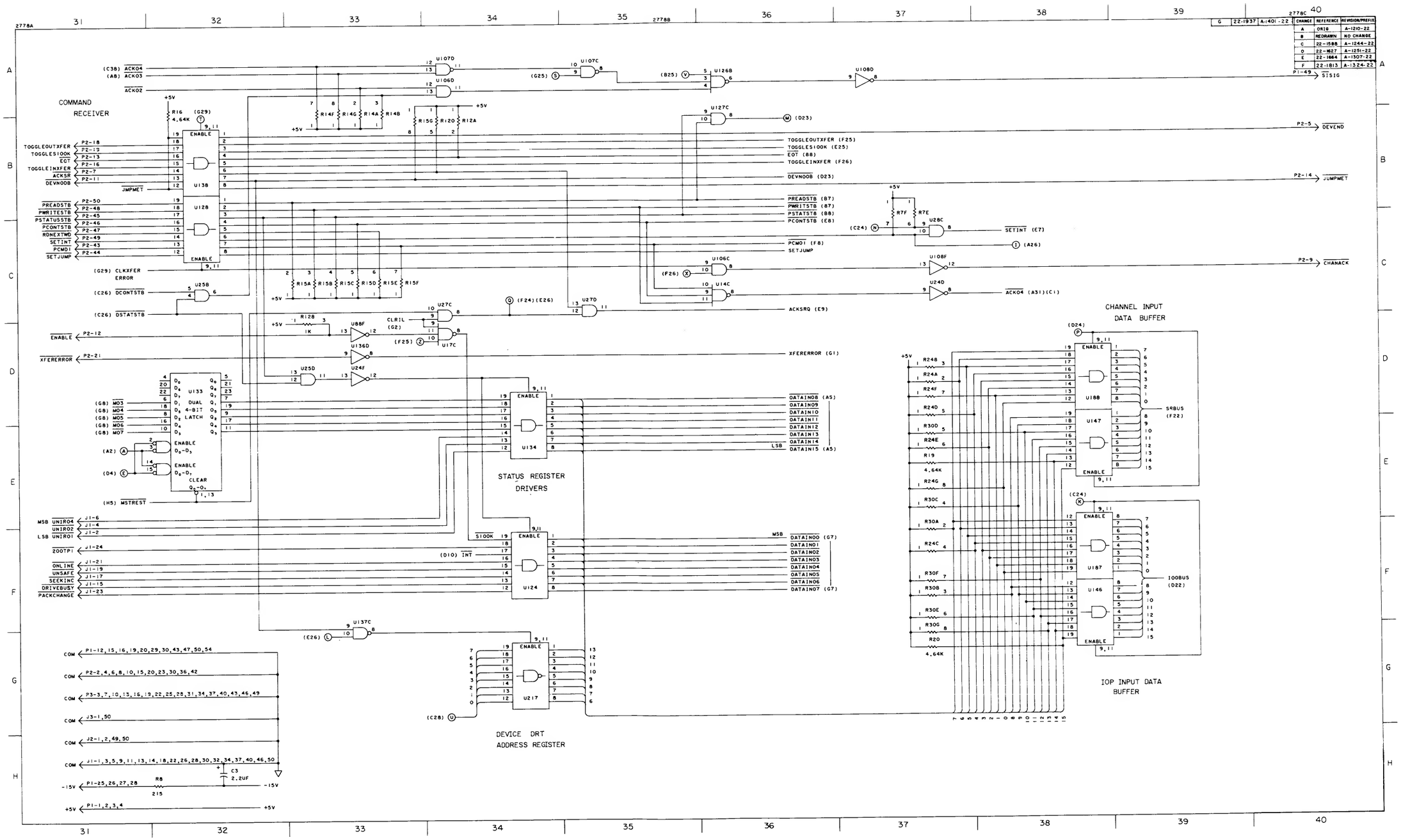

CHANGE	REFERENCE	REVISION/PREFIX
A	ORIG	A-1210-22
B	REDRAWN	NO CHANGE
C	22-1588	A-1244-22
D	22-1627	A-1251-22
E	22-1664	A-1307-22
F	22-1813	A-1324-22
G	22-1937	A-1401-22

Disc File Read/Write PCA, 30202-60001, Sheet 4 of 5

SYM.	REVISIONS	APPROVED	DATE
H	REDRAWN. CHG. NOTE 5; ADD. NOTES: 10, 11, 12, AND ITEMS: 10, 11.	GZ/	4-3-74
J	ADD [illegible] TO W16, ADD W16 TO NOTE 11	GZ/	9-13-74
K	CHG. NOTE 3, ADD NOTE 13	GZ/	3-26-75
L	ADDED NOTE 14 OOZ USAGE	DJ/	5-27-75

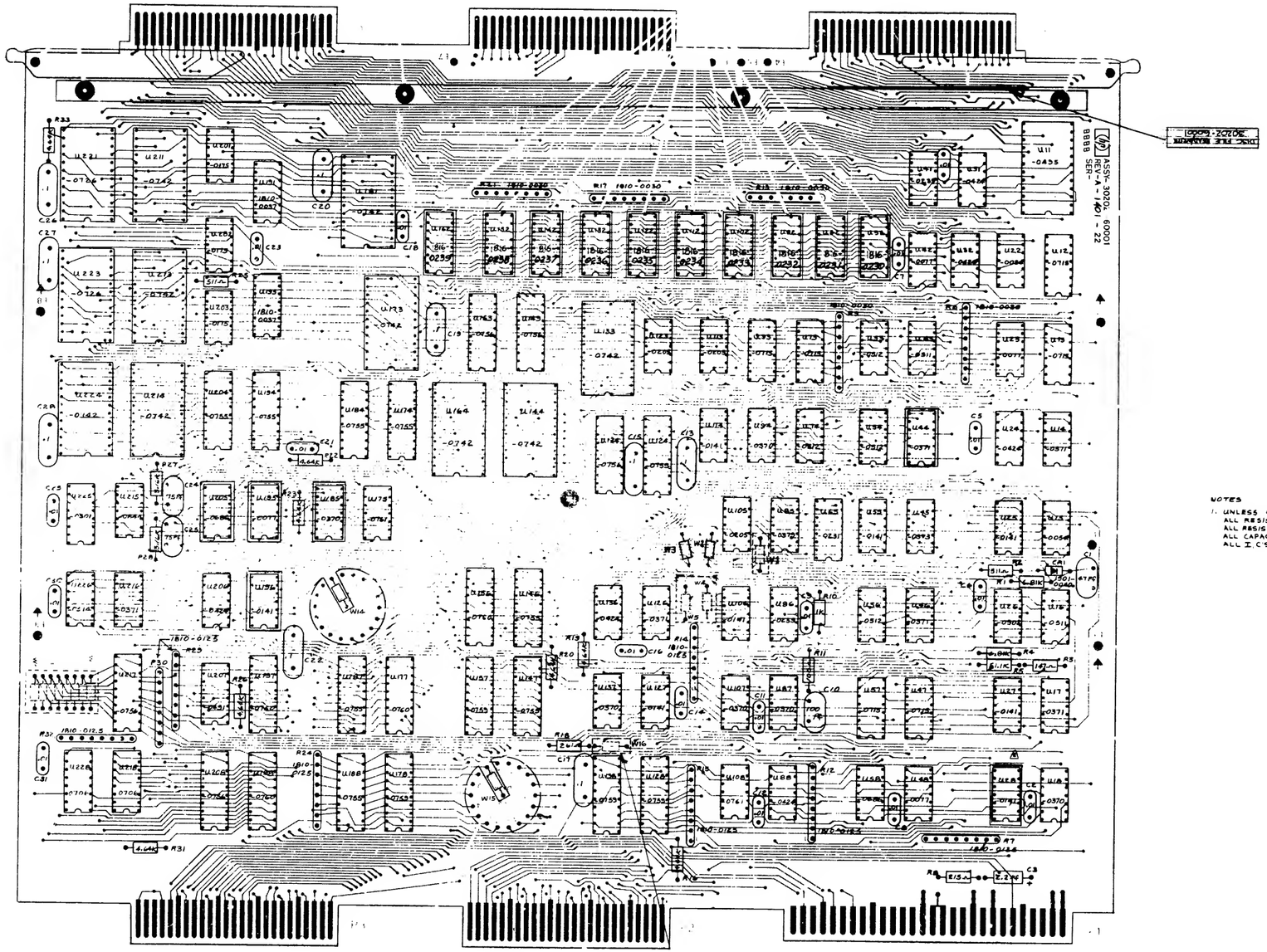

NOTES

1. UNLESS OTHERWISE NOTED
ALL RESISTANCE IN OHMS
ALL RESISTORS 1/8W, 1%, FILM
ALL CAPACITANCE IN MICROFARADS
ALL I.C'S ARE 1820-

Disc File Read/Write PCA, 30202-60001, Sheet 5 of 5

CHANGE	REFERENCE	REVISION/PREFIX
A	ORIG	A-1210-22
B	REDRAWN	NO CHANGE
C	PPC-A	NO CHANGE
D	PPC-B	A-1236-22
E	ERRATA	NO CHANGE
F	ERRATA	NO CHANGE

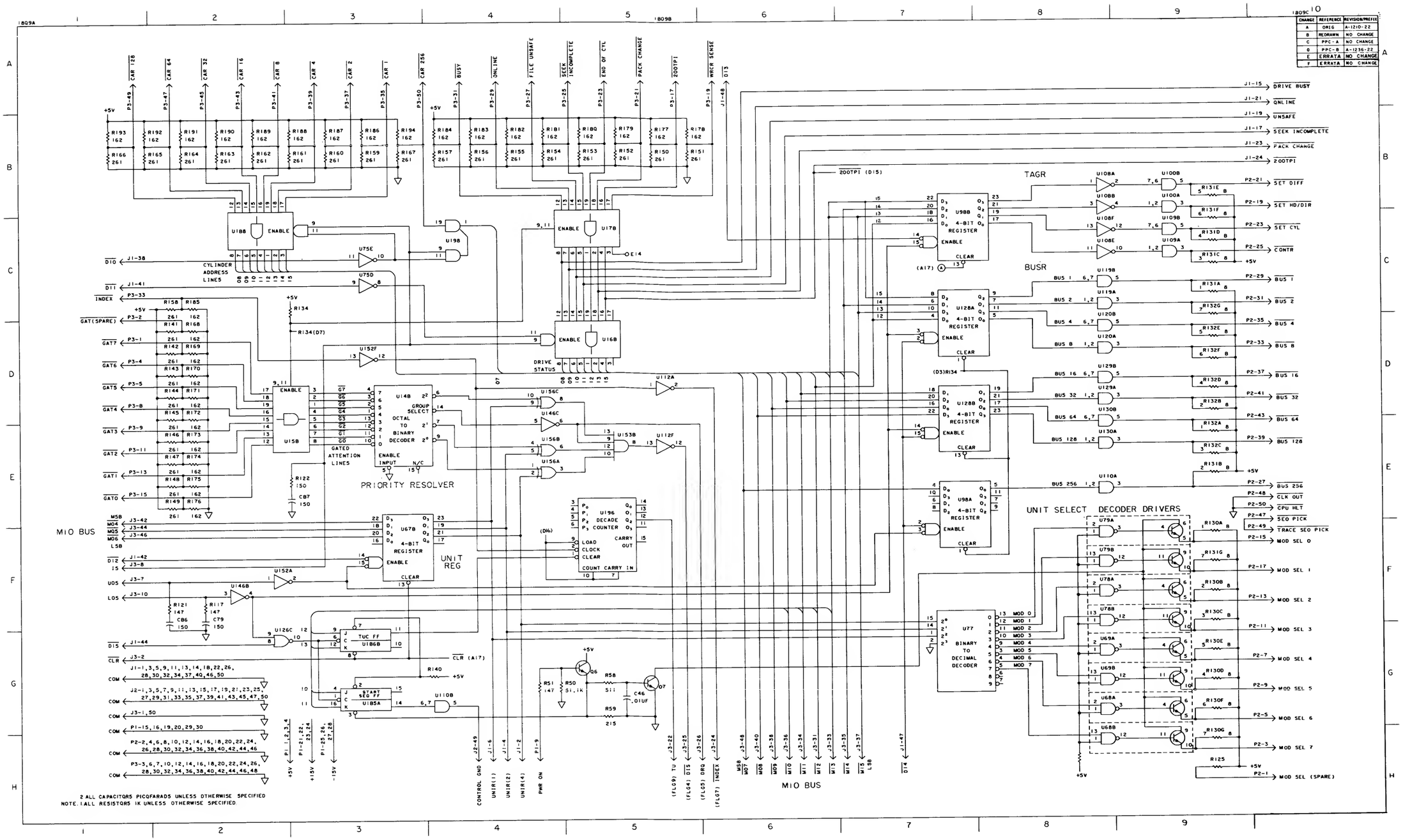

Disc File Bus PCA, 30202-60002, Sheet 1 of 4

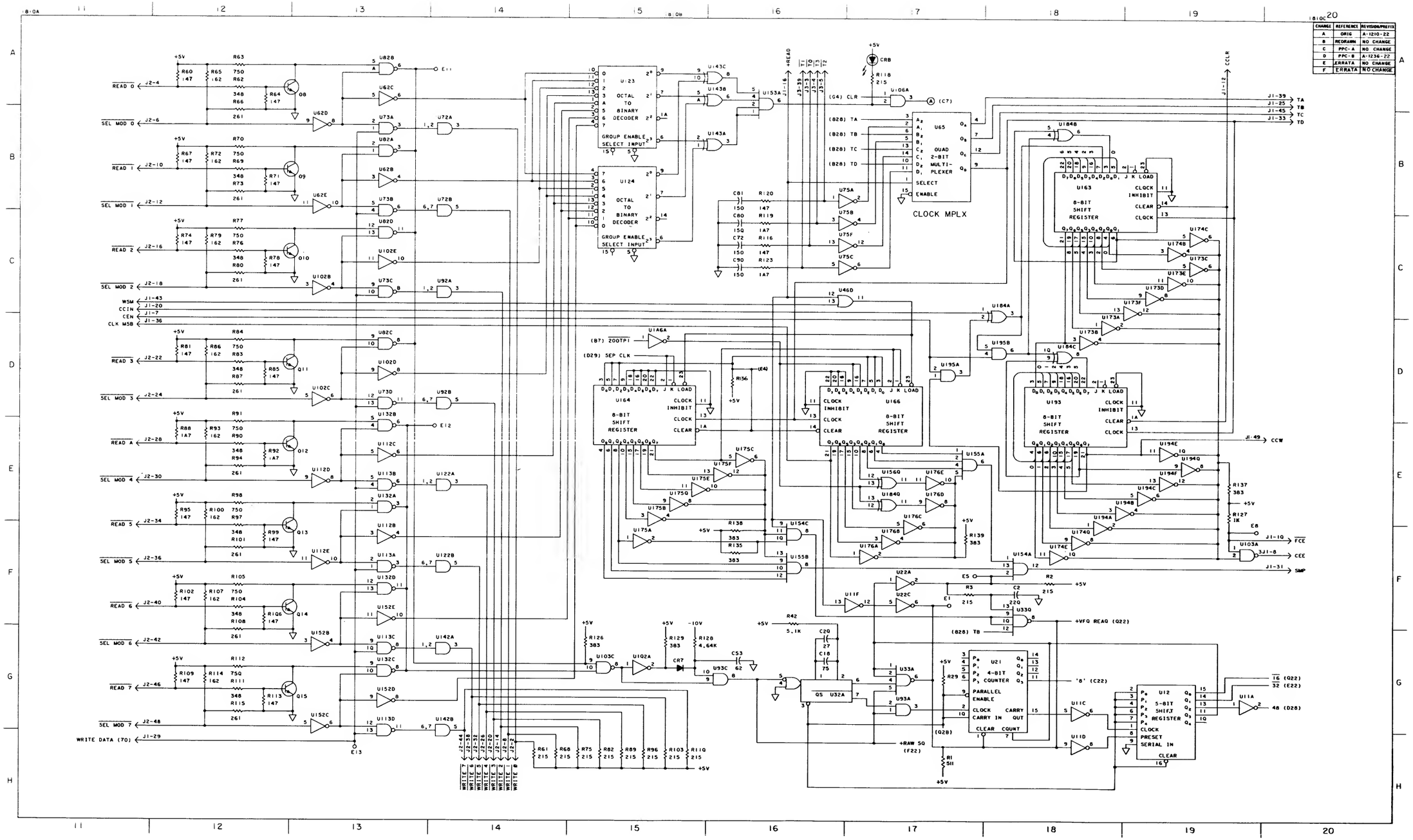

Disc File Bus PCA, 30202-60002, Sheet 2 of 4

CHANGE	REFERENCE	REVISION/PREFIX
A	ORIG	A-1210-22
B	REDRAWN	NO CHANGE
C	PPC-A	NO CHANGE
D	PPC-B	A-1238-22
E	ERRATA	NO CHANGE
F	ERRATA	NO CHANGE

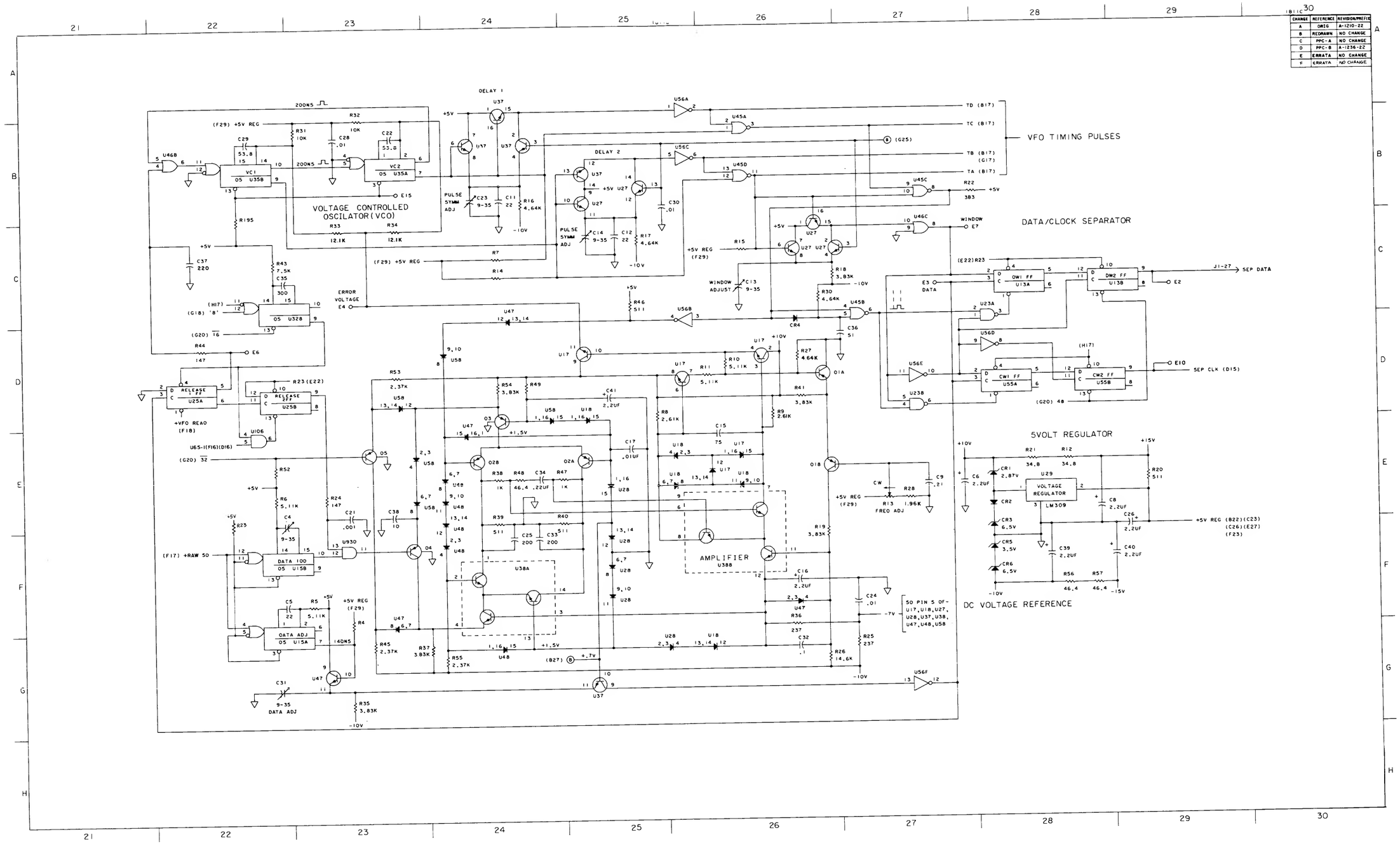

Disc File Bus PCA, 30202-60002, Sheet 3 of 4

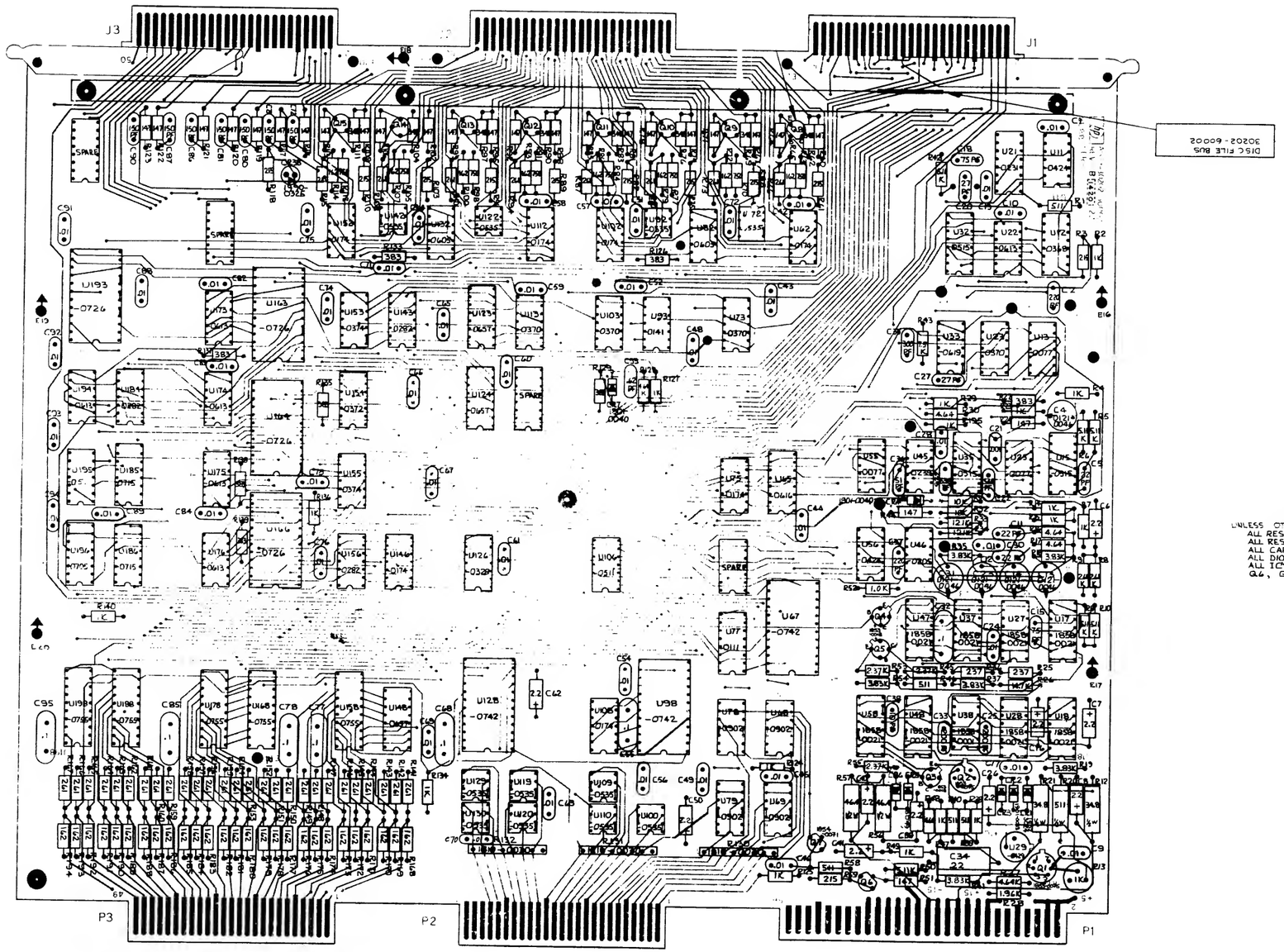

SYM	REVISIONS	APPROVED	DATE
A	AS ISSUED		
B	ADDED SHIELD DIA. 1A890		
C	WAS 1820-0710 & WAS 1820-0711 C41, C50 WAS OMITTED ON 30202-60002		7-24-78
D	ECO 1A6 1A8 ADDED JUMPERS TO C41, C15, C14, C25, C31		10-20-78

UNLESS OTHERWISE NOTED
ALL RESISTORS 1/8W 1 O/O FILM
ALL RESISTANCE IN OHMS
ALL CAPACITANCE IN MICROFARADS
ALL DIODES 1902-3119
ALL ICS ARE 1820-
Q4, Q8-15 - 1854-0094

Disc File Bus PCA, 30202-60002, Sheet 4 of 4

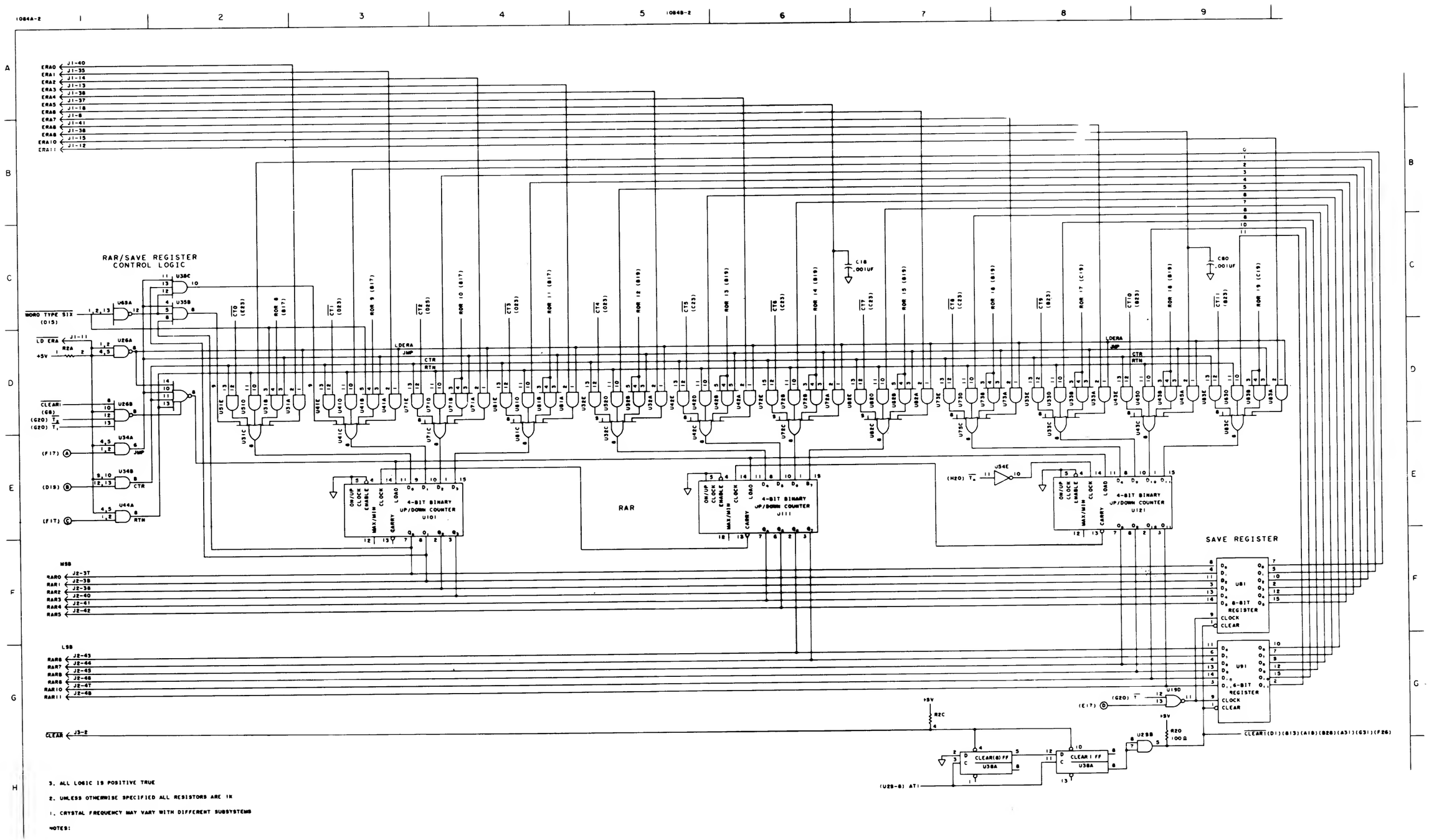

Disc Controller Processor PCA, 30202-60003, Sheet 1 of 5

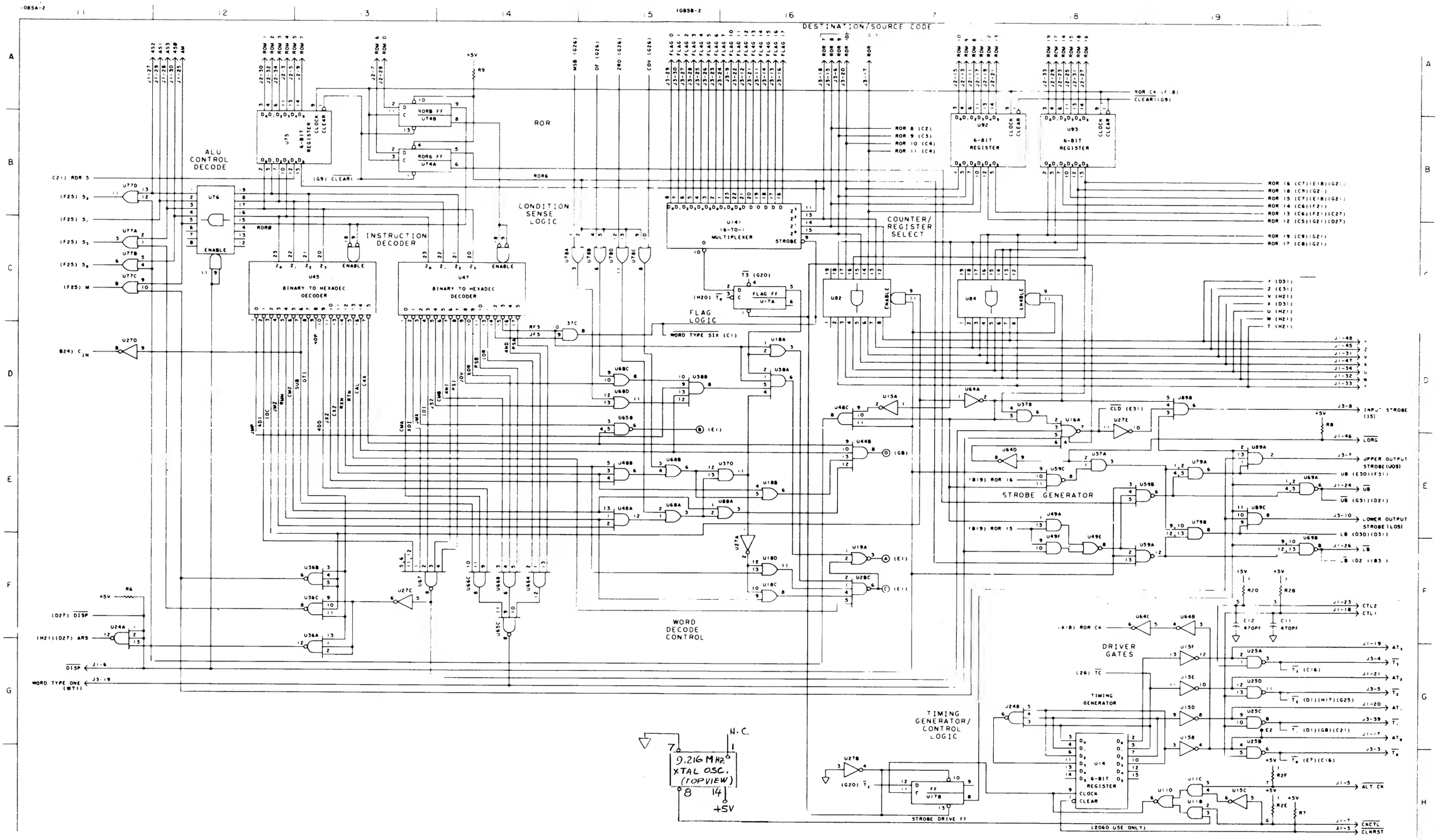

Disc Controller Processor PCA, 30202-60003, Sheet 2 of 5

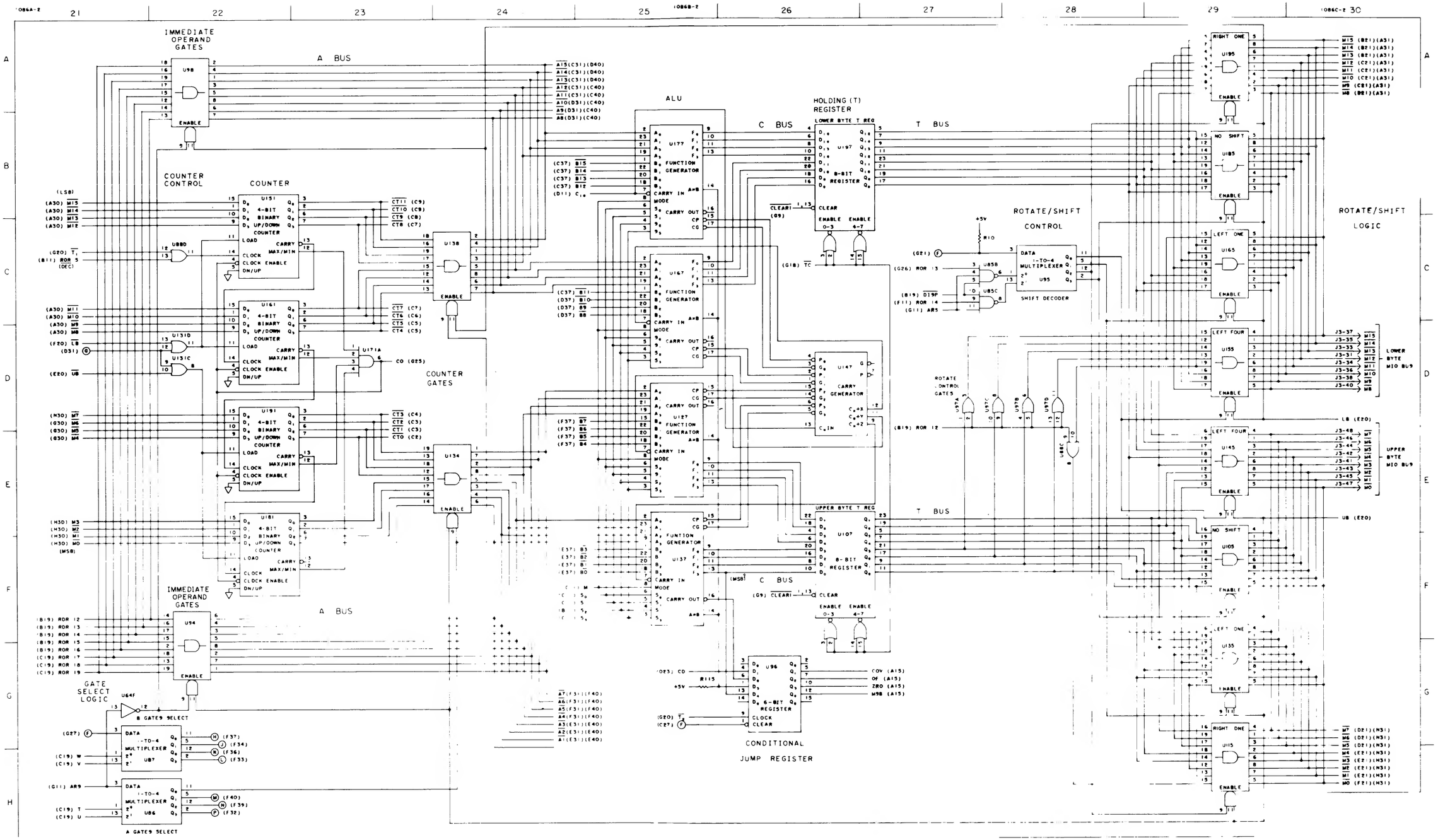

Disc Controller Processor PCA, 30202-60003, Sheet 3 of 5

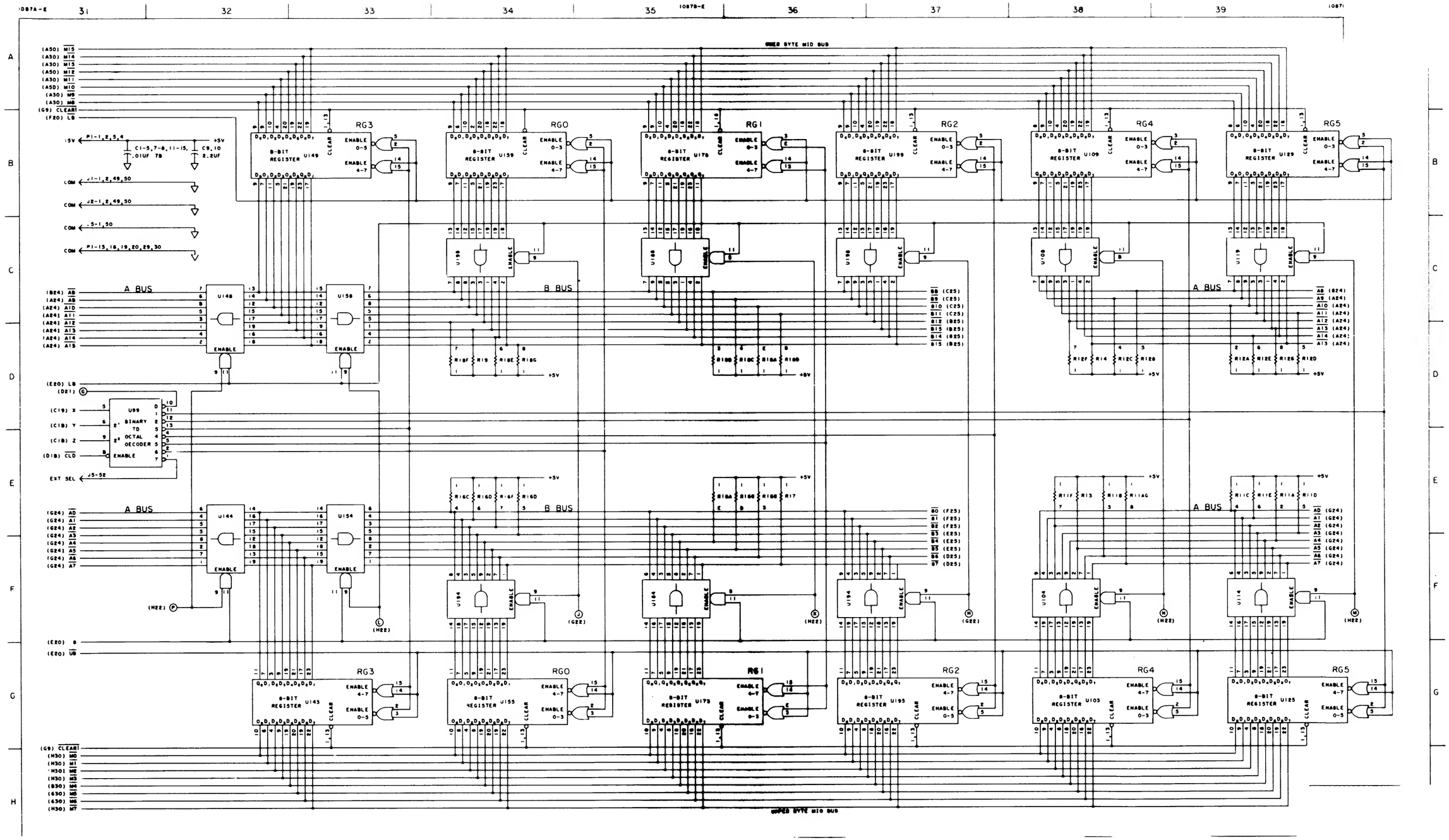

Disc Controller Processor PCA, 30202-60003, Sheet 4 of 5

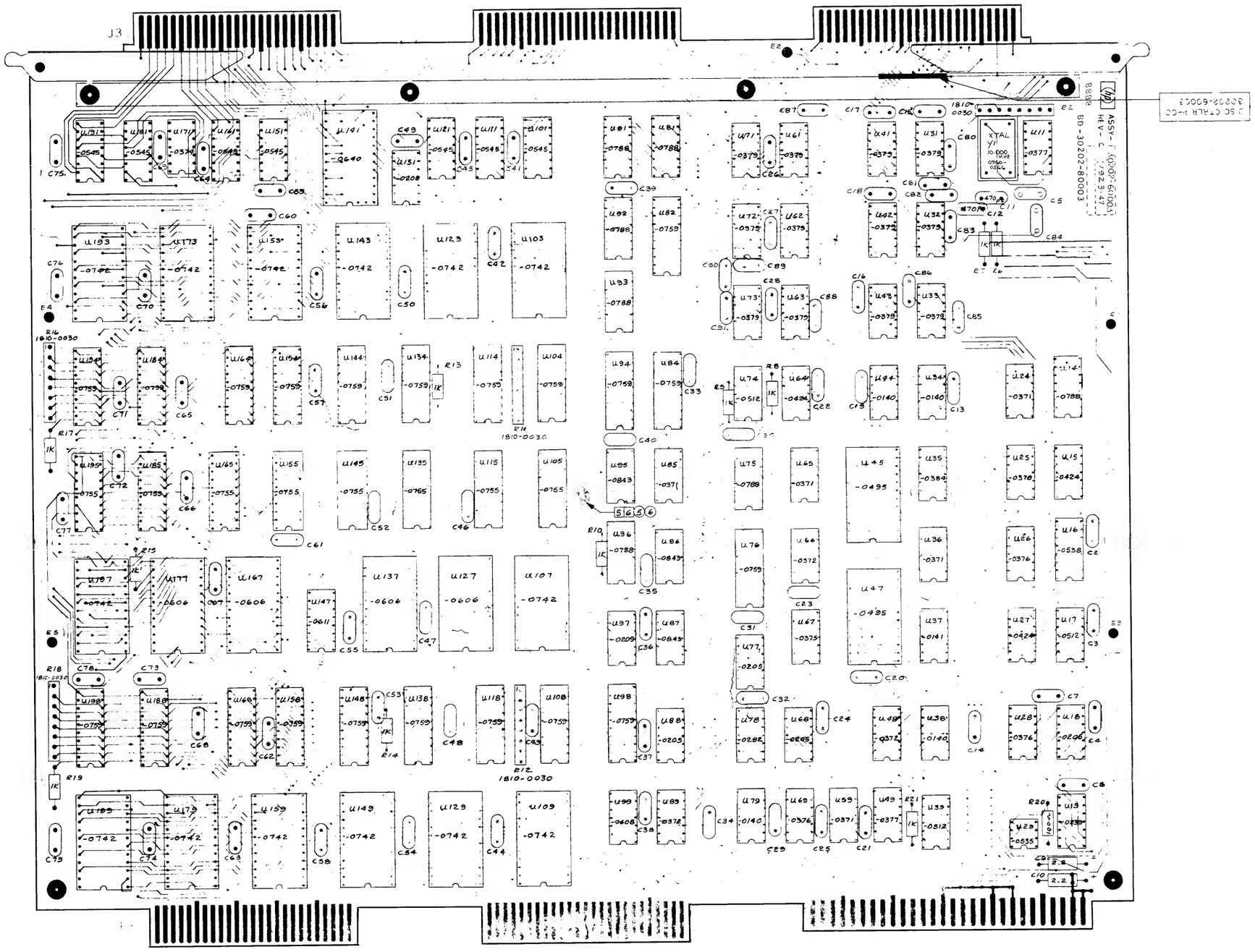

NOTES

1 UNLESS OTHERWISE NOTED
ALL RESISTANCE IN OHMS
ALL RESISTORS 1/8 W 1% F
ALL CAPACITANCE IN MICRO FARADS
ALL CAPACITORS .01/16 CER. DISC
ALL I C'S ARE 1820 - XXXX

Disc Controller Processor PCA, 30202-60003, Sheet 5 of 5

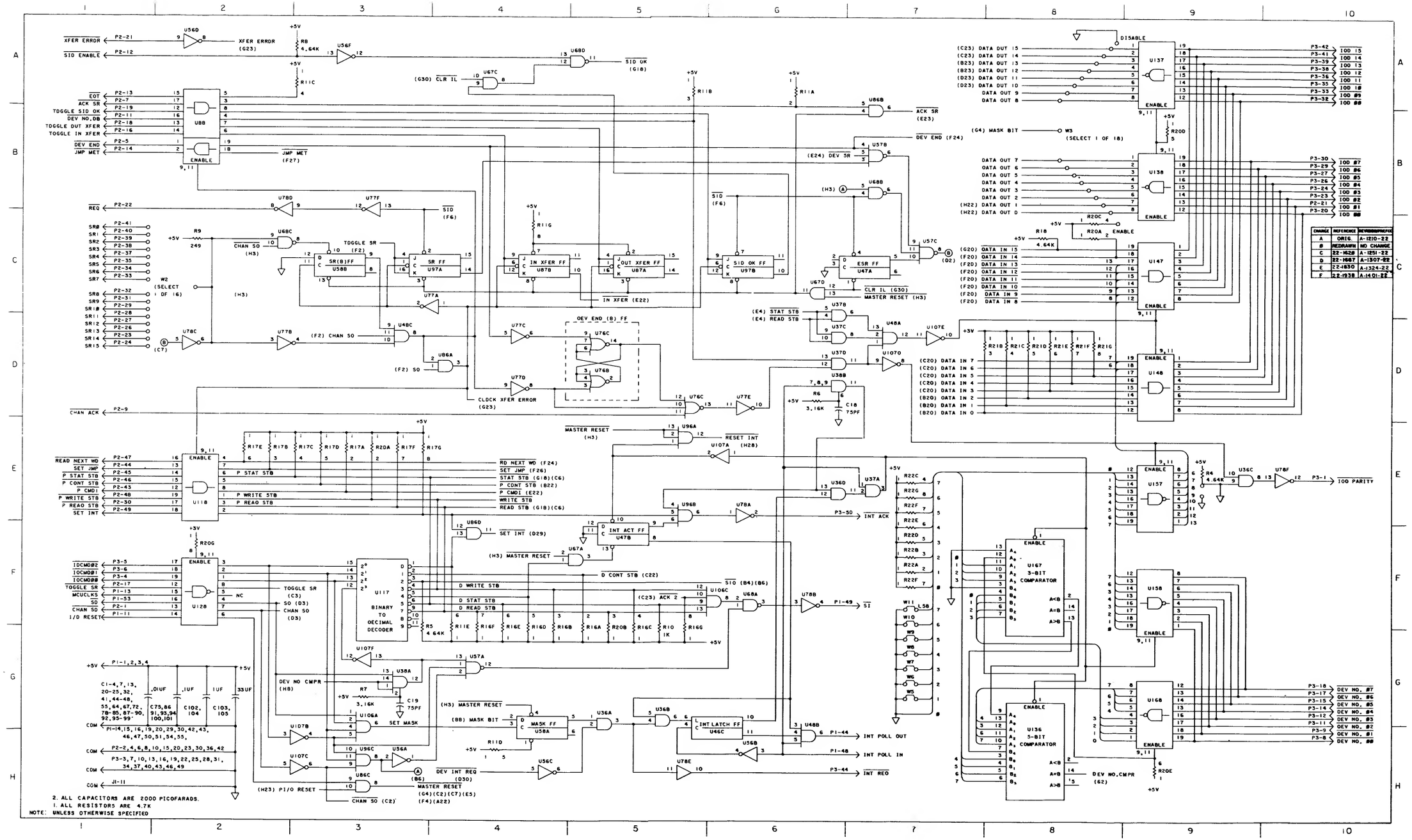

CHANGE	REFERENCE	REVISION/PARTS
A	ORIG.	A-1210-22
B	REDRAWN	NO CHANGE
C	22-1629	A-1251-22
D	22-1667	A-1307-22
E	22-1830	A-1324-22
F	22-1938	A-1401-22

Card Reader Interface PCA, 30206-60001, Sheet 1 of 4

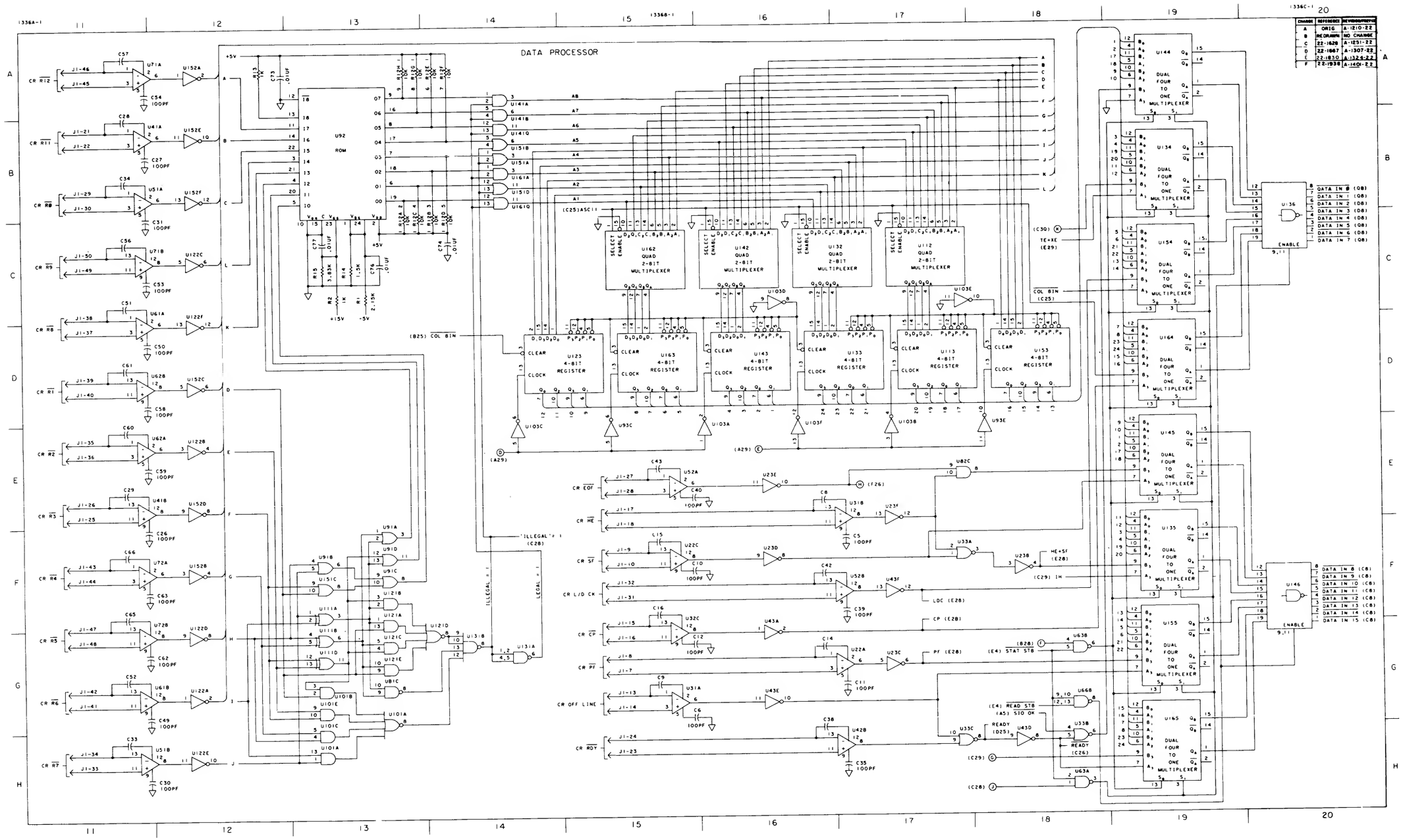

Card Reader Interface PCA, 30206-60001, Sheet 2 of 4

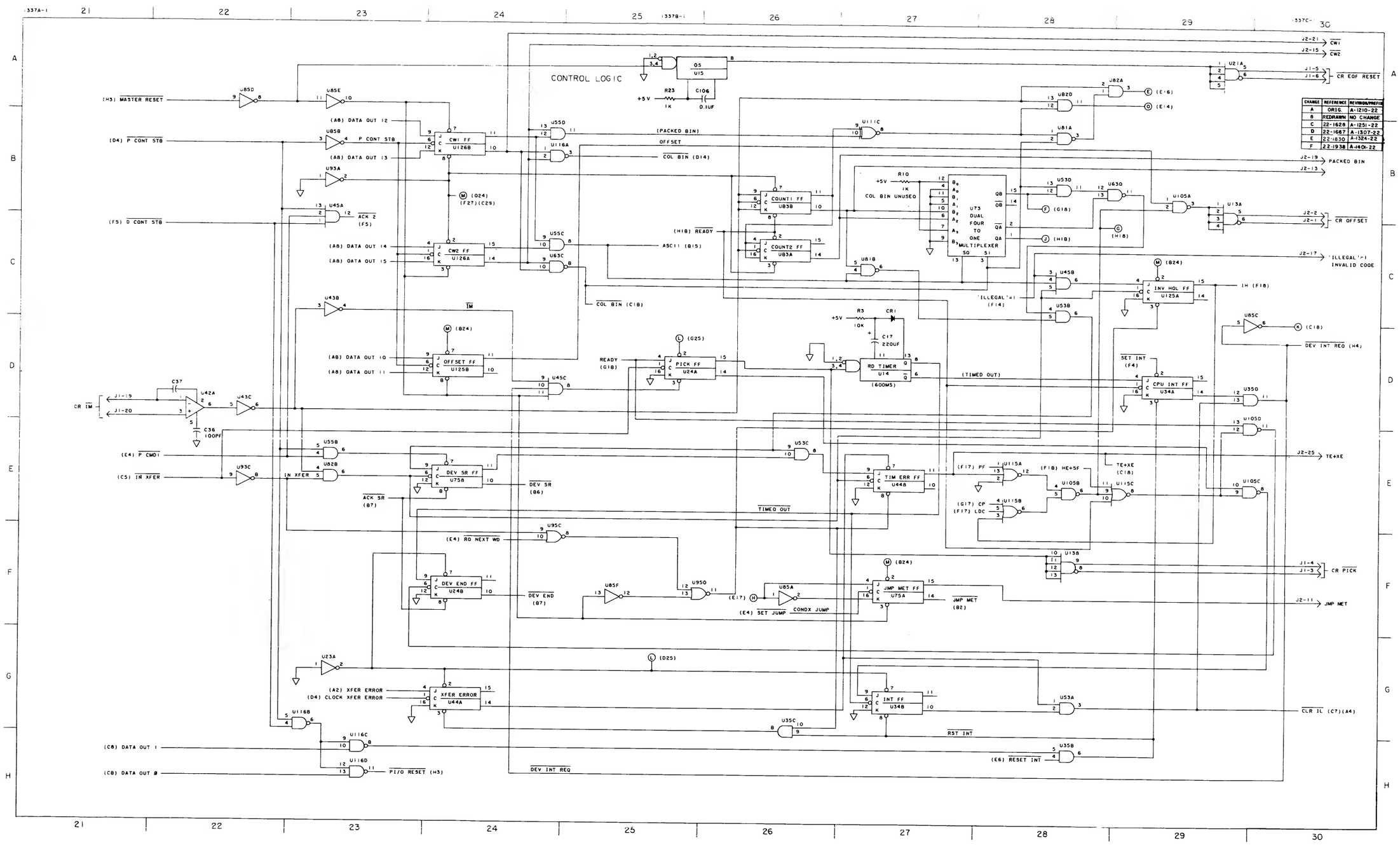

Card Reader Interface PCA, 30206-60001, Sheet 3 of 4

SYM	REVISIONS	APPROVED	DATE
A	AS ISSUED		
B	U15 & 3 IC SOCKETS ADDED - DATE CODE WAS 1225 - C-26 & C-3 ADDED. R23 & C106 ADDED.		1-19-73 2-1-73
C	DATE CODE WAS 1251 PC22-1667		3-8-73
D	PCO#22-1938. 1060 WAS 2-1307		1-24-74
E	PCO#22-1938 1060 WAS 4-1328		1-24-74
F	ADDED 3107A NOT USAGE		4-15

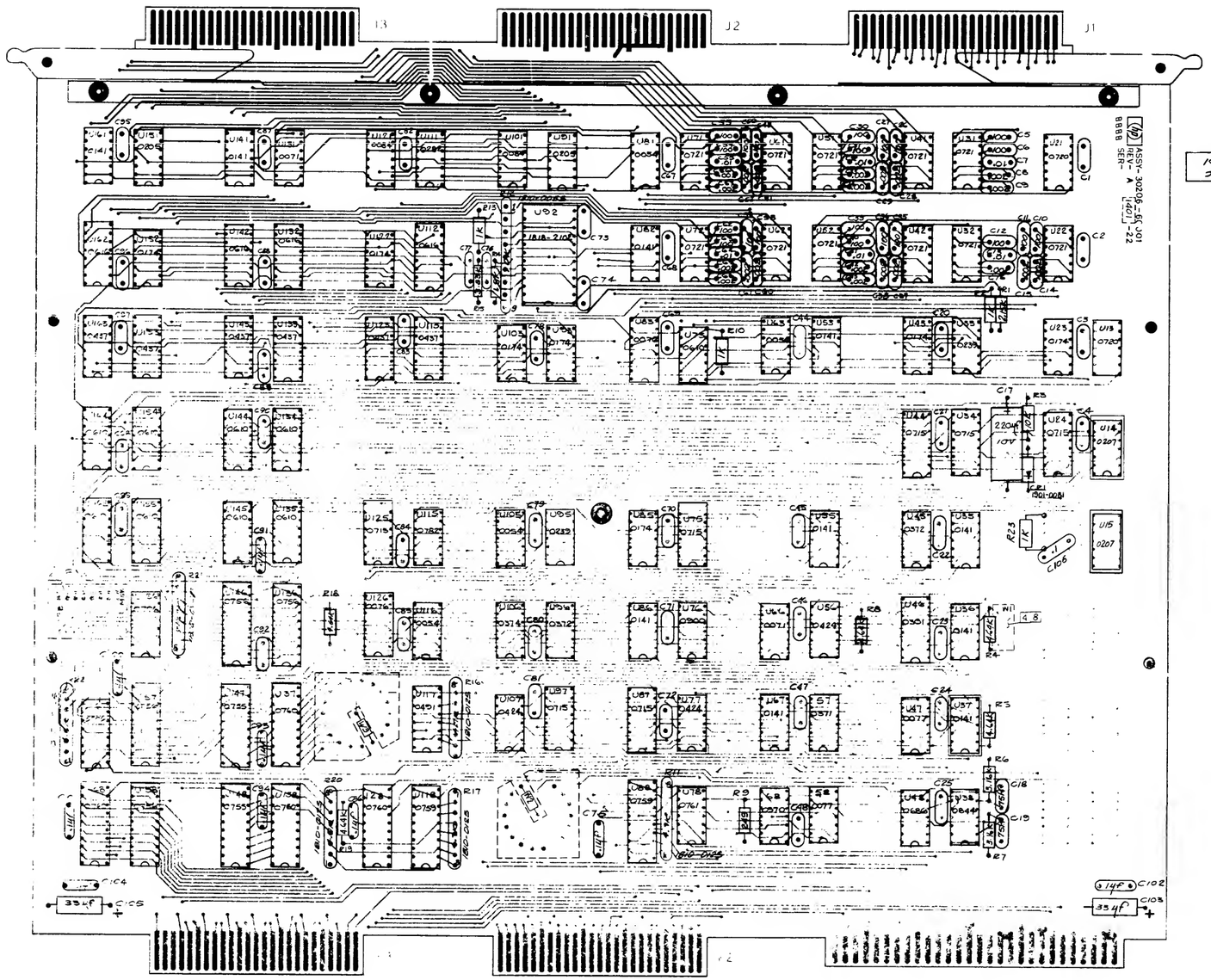

CD RDR INTFC
30206-60001

NOTES:

1. UNLESS OTHERWISE SPECIFIED:
   ALL RESISTANCE IN OHMS
   ALL RESISTORS 1/4W 1% FILM
   ALL CAPACITANCE IN MICROFARADS
   ALL CAPACITORS .01UF CER DISC
   ALL IC'S ARE #820-

Card Reader Interface PCA, 30206-60001, Sheet 4 of 4

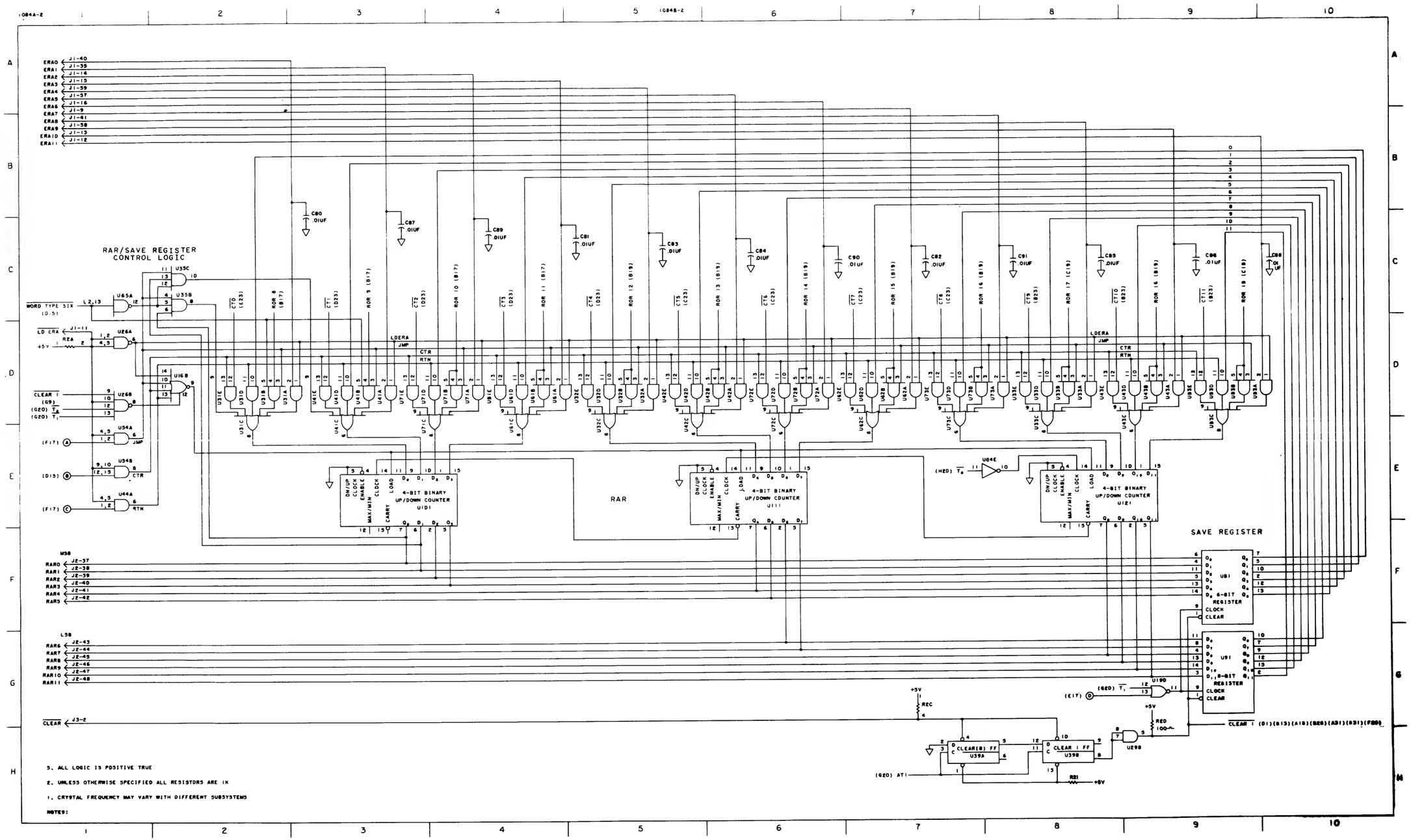

MAG Tape Controller Processor PCA, 30215-60002, Sheet 1 of 5

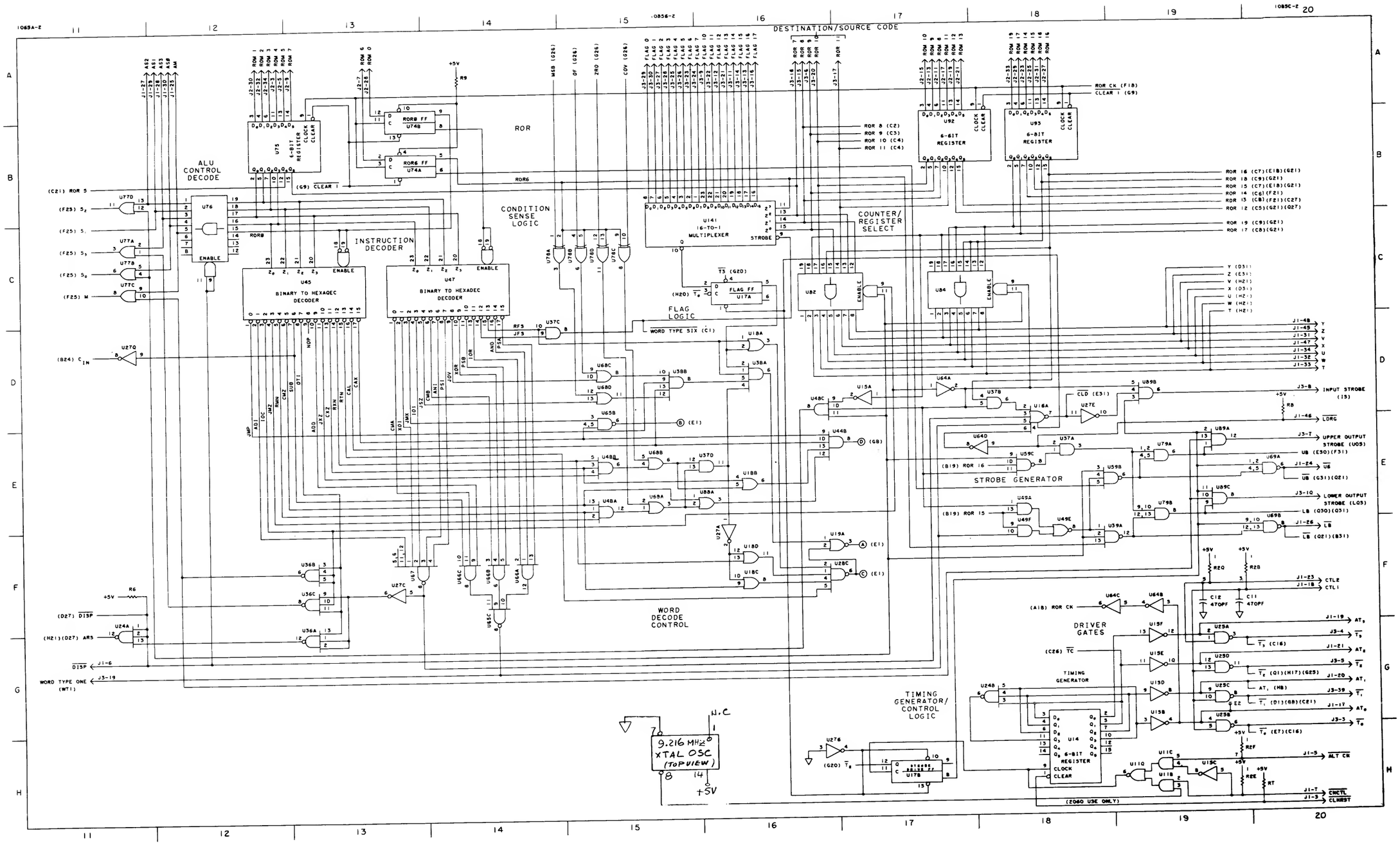

MAG Tape Controller Processor PCA, 30215-60002, Sheet 2 of 5

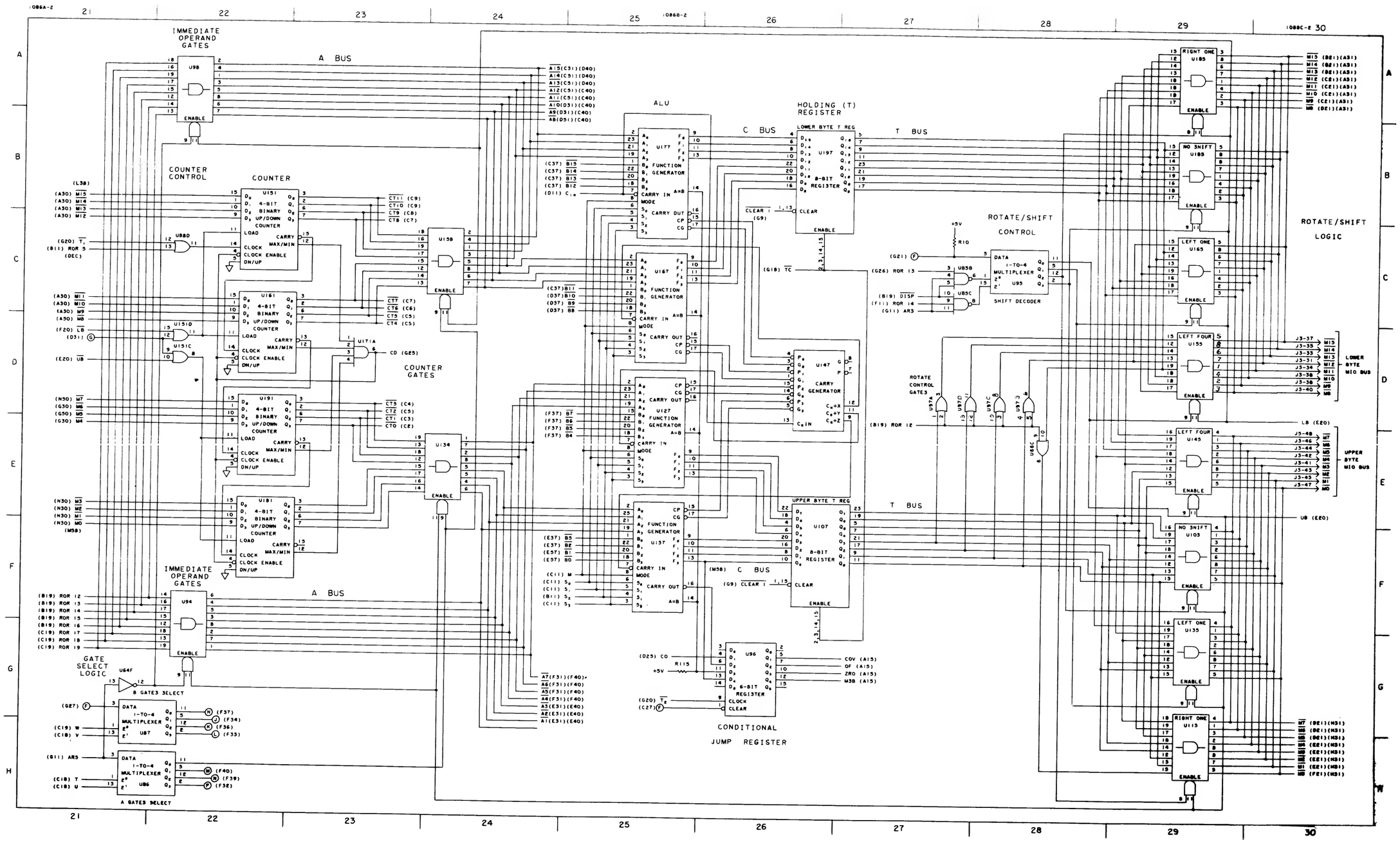

MAG Tape Controller Processor PCA, 30215-60002, Sheet 3 of 5

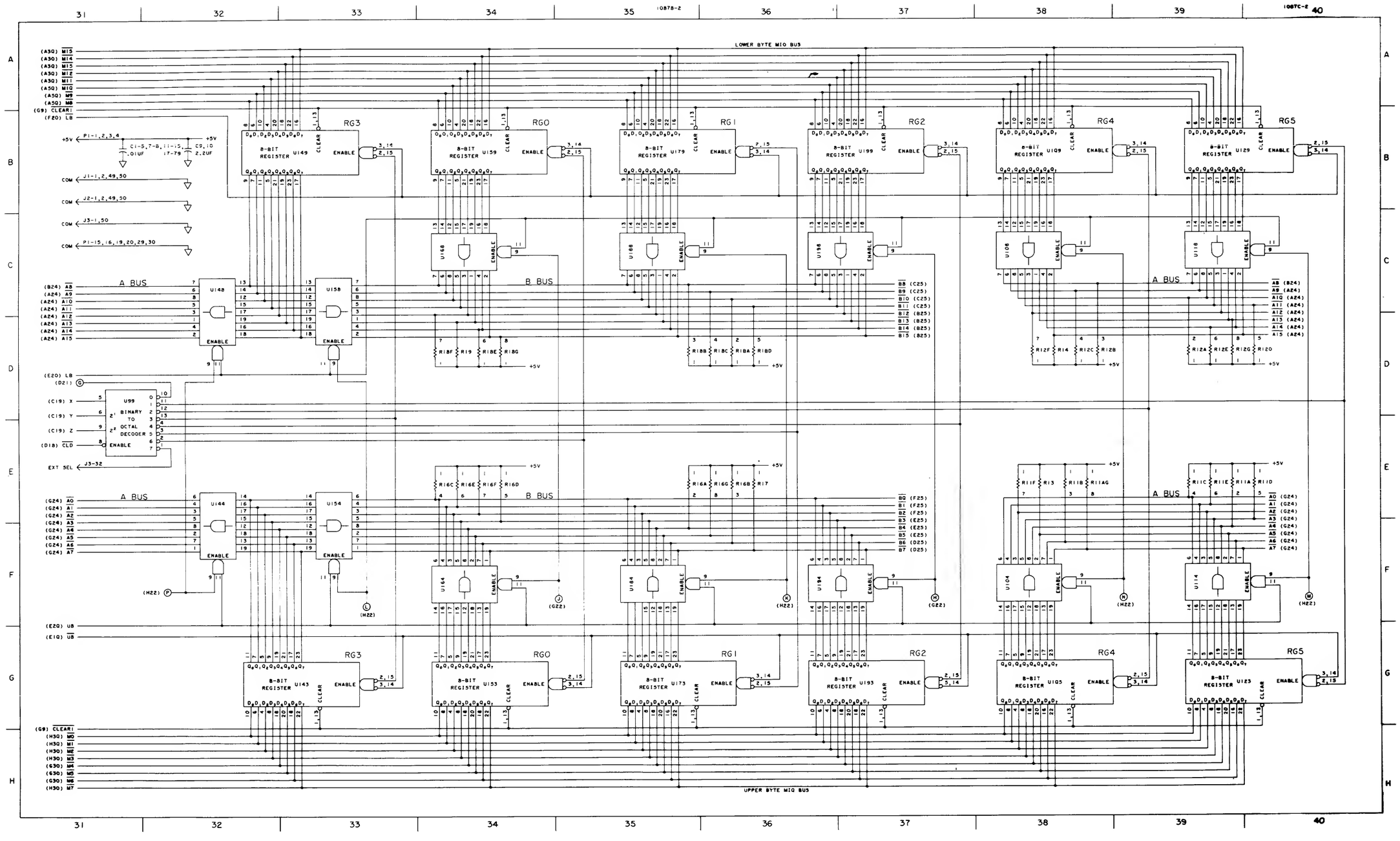

MAG Tape Controller Processor PCA, 30215-60002, Sheet 4 of 5

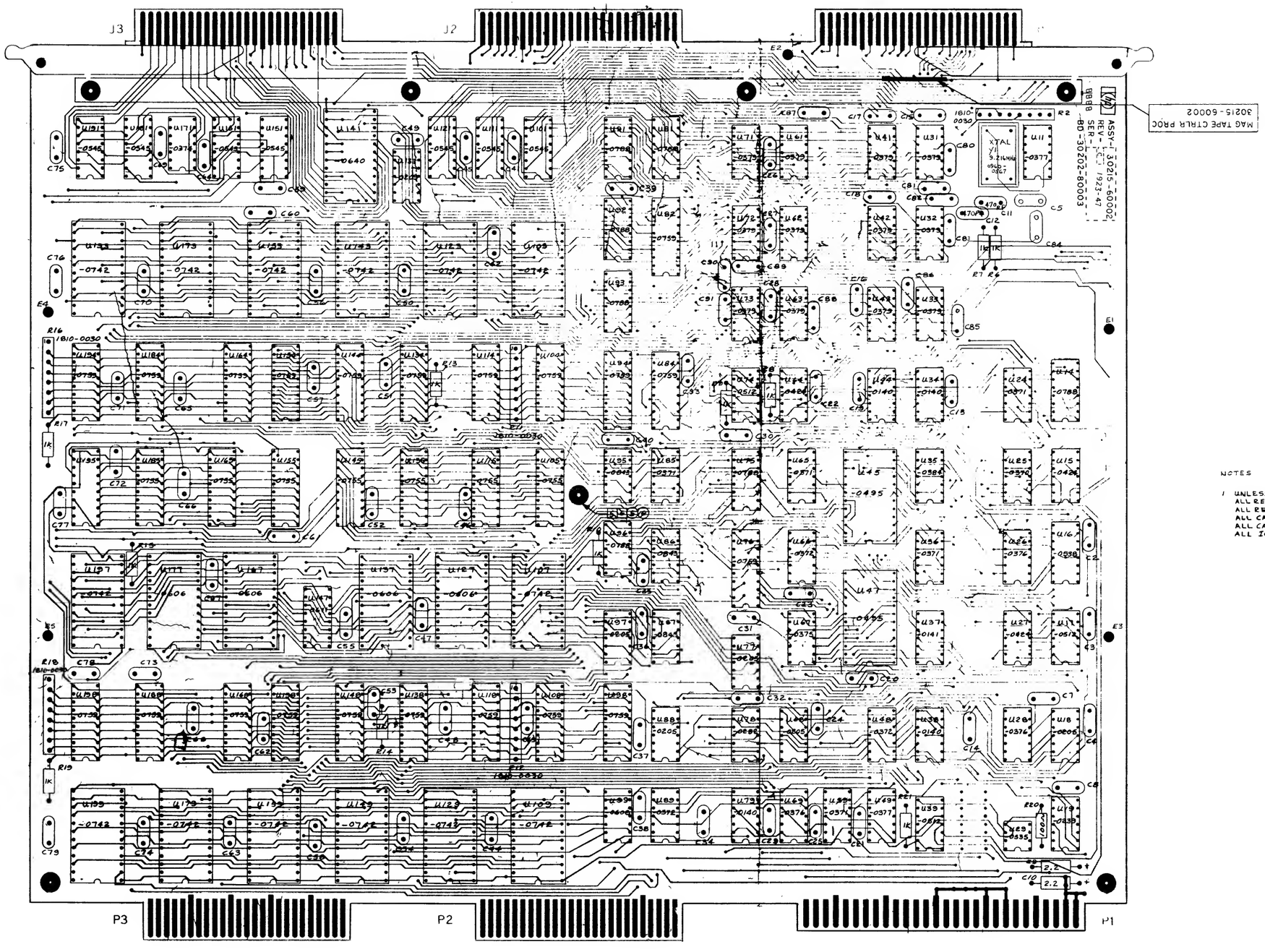

MAG Tape Controller Processor PCA, 30215-60002, Sheet 5 of 5

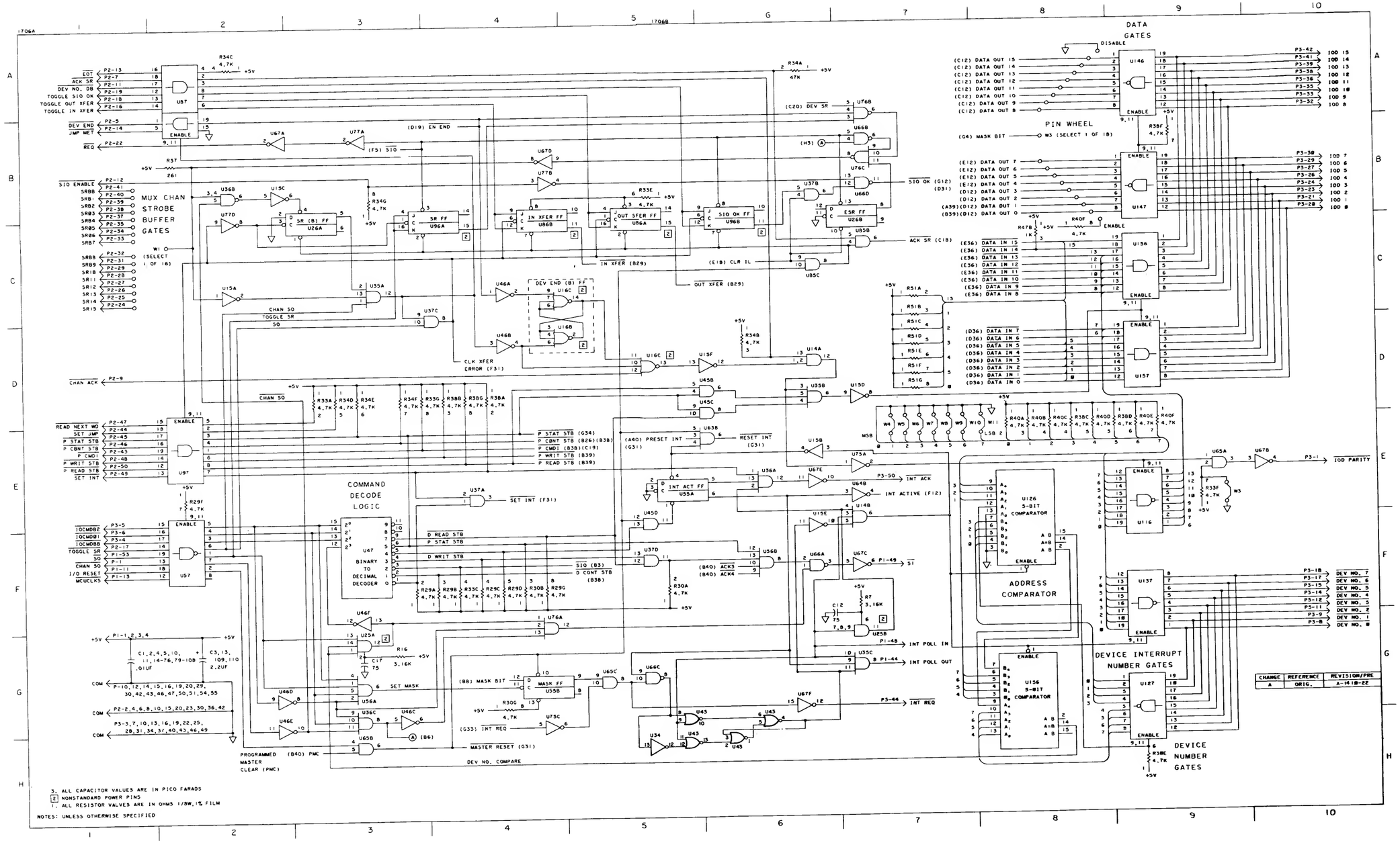

CHANGE	REFERENCE	REVISION/PRE
A	ORIG.	A-1418-22

3. ALL CAPACITOR VALUES ARE IN PICO FARADS
2 NONSTANDARD POWER PINS
1. ALL RESISTOR VALUES ARE IN OHMS 1/8W,1% FILM

NOTES: UNLESS OTHERWISE SPECIFIED

Mag Tape (9 Track) Controller, 30215-60006, Sheet 1 of 5

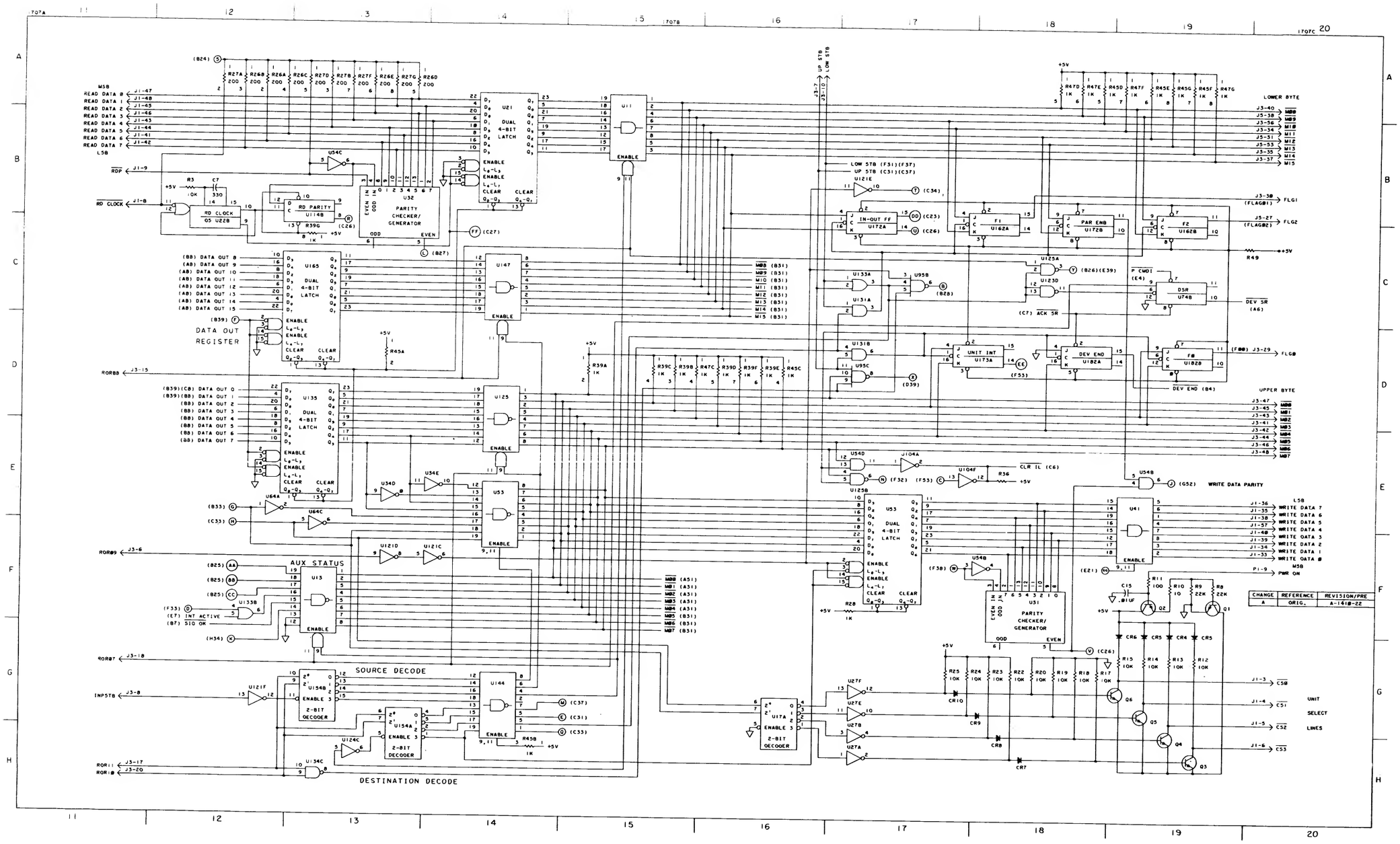

Mag Tape (9 Track) Controller, 30215-60006, Sheet 2 of 5

CHANGE	REFERENCE	REVISION/PRE
A	ORIG.	A-14811-22

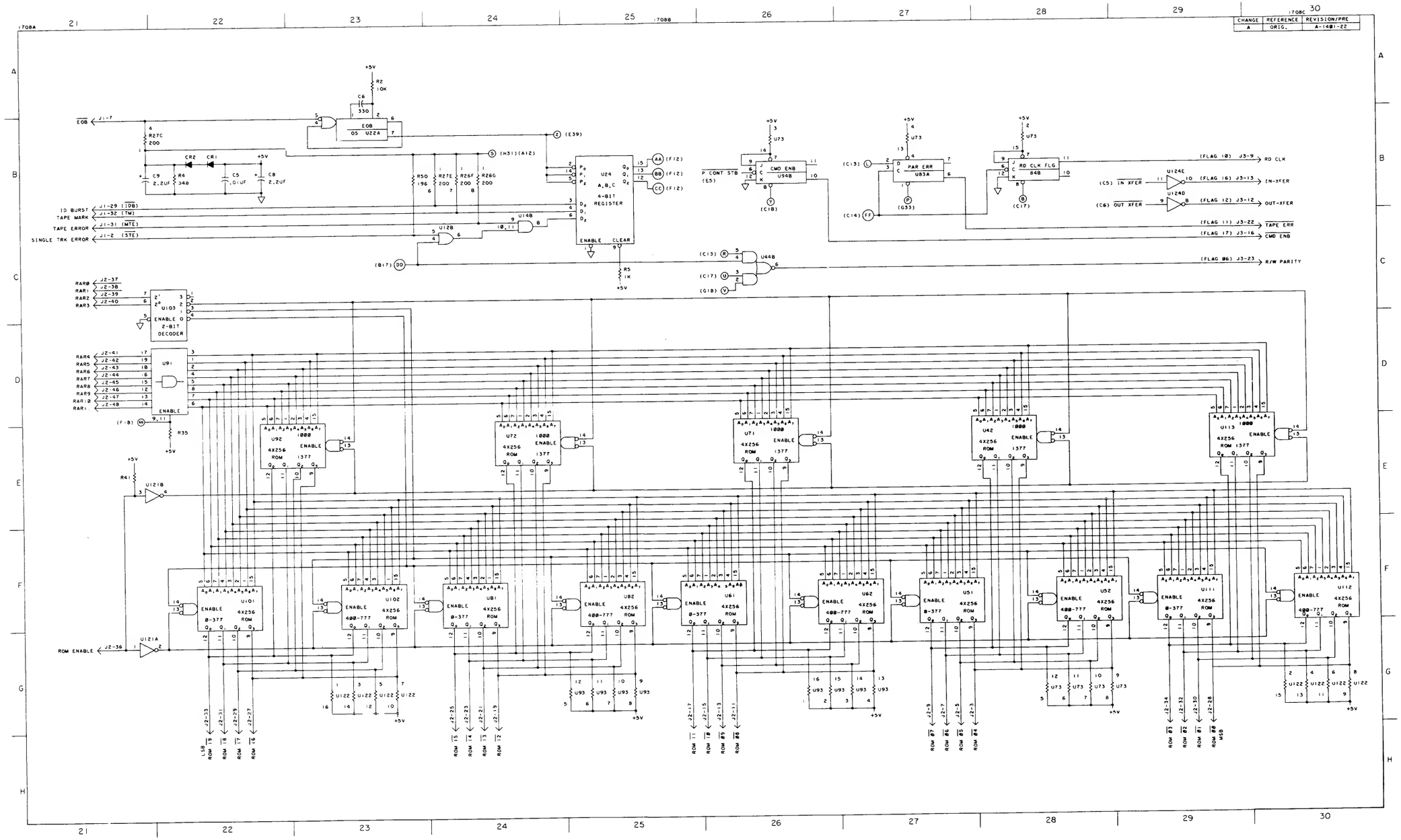

Mag Tape (9 Track) Controller, 30215-60006, Sheet 3 of 5

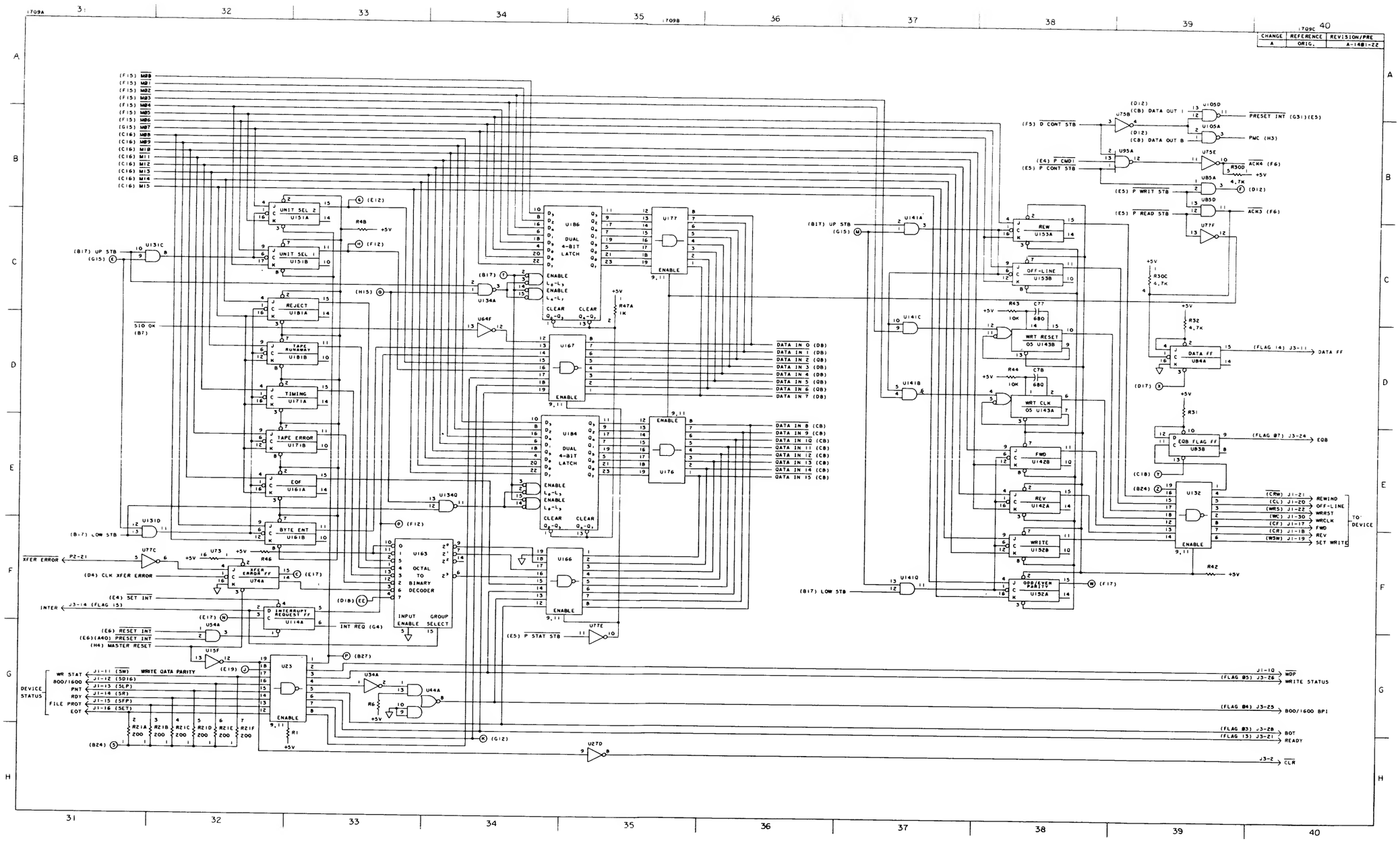

Mag Tape (9 Track) Controller, 30215-60006, Sheet 4 of 5

C	BEIDMANN. ADD NOTE 12 13 CHG. NO. 8 NO.	JAY		7-3-74
D	FOR SELECTORS 1810-0220/0229/0214 DUB, DATE CODE WAS 8 YEO	JAY	CB	9-24-75
E	REVISED NOTE 11	JAY	CB	10-9-75
F	PCO. 47-0816 - ADD NOTE 13, MODIFIED NOTE 2. DATE CODE WAS 8-1533-22	JAY	GN	2-3-76

NOTES:

1. UNLESS OTHERWISE SPECIFIED:
   ALL RESISTANCE IN OHMS
   ALL RESISTORS 1/8W 1%
   ALL CAPACITANCE IN MICROFARADS
   ALL CAPACITORS .01uf CERAMIC DISC
   ALL DIODES 901-0061
   ALL IC'S ARE 820-
   ALL TRANSISTORS ARE 854-0477
   W1-W2 ARE 859-0005

Mag Tape (9 Track) Controller, 30215-60006, Sheet 5 of 5

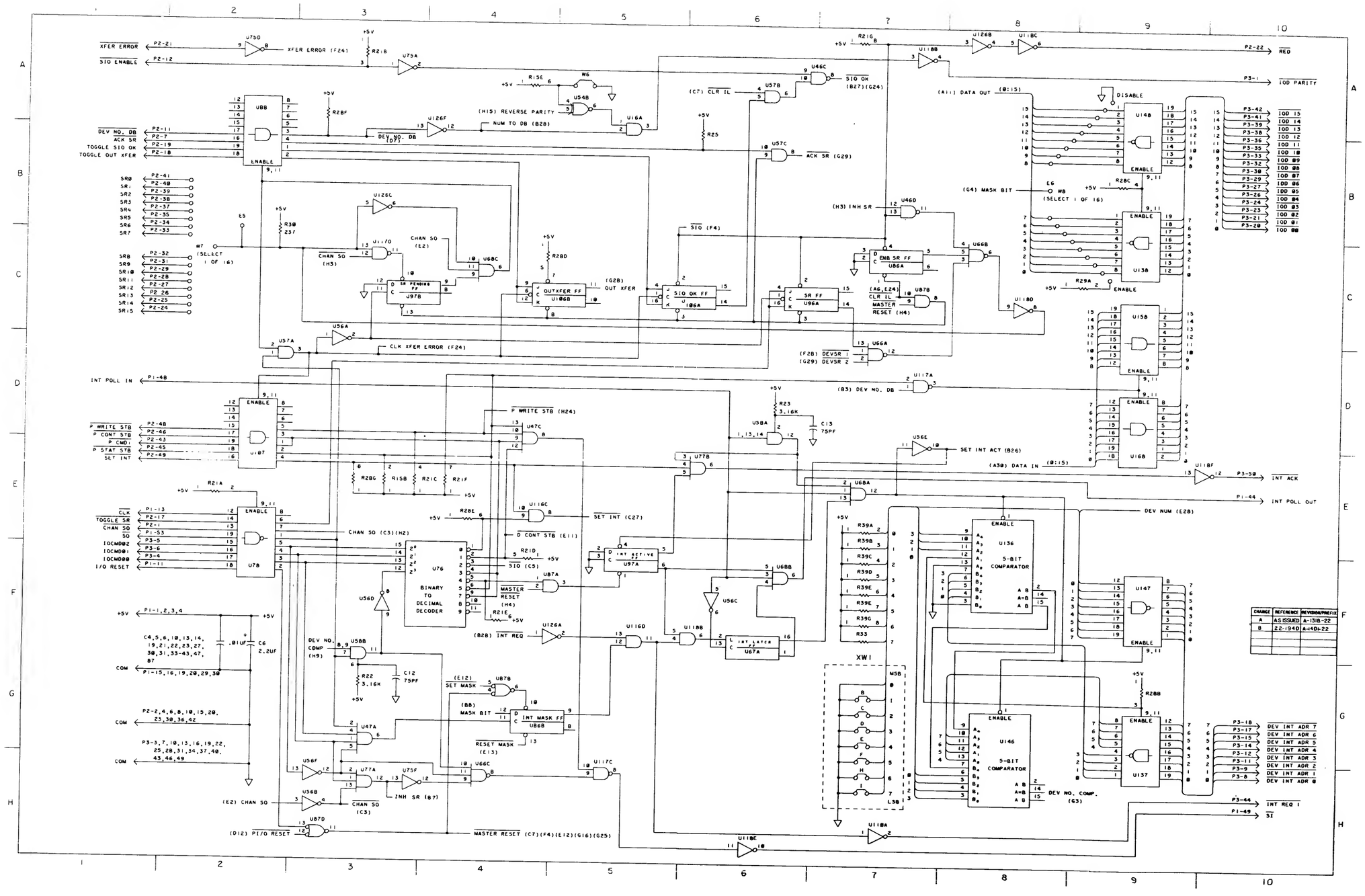

CHANGE	REFERENCE	REVISION/PREFIX
A	AS ISSUED	A-1318-22
B	22-1940	A-1401-22

Plotter Interface PCA, 30226-60001, Sheet 1 of 4

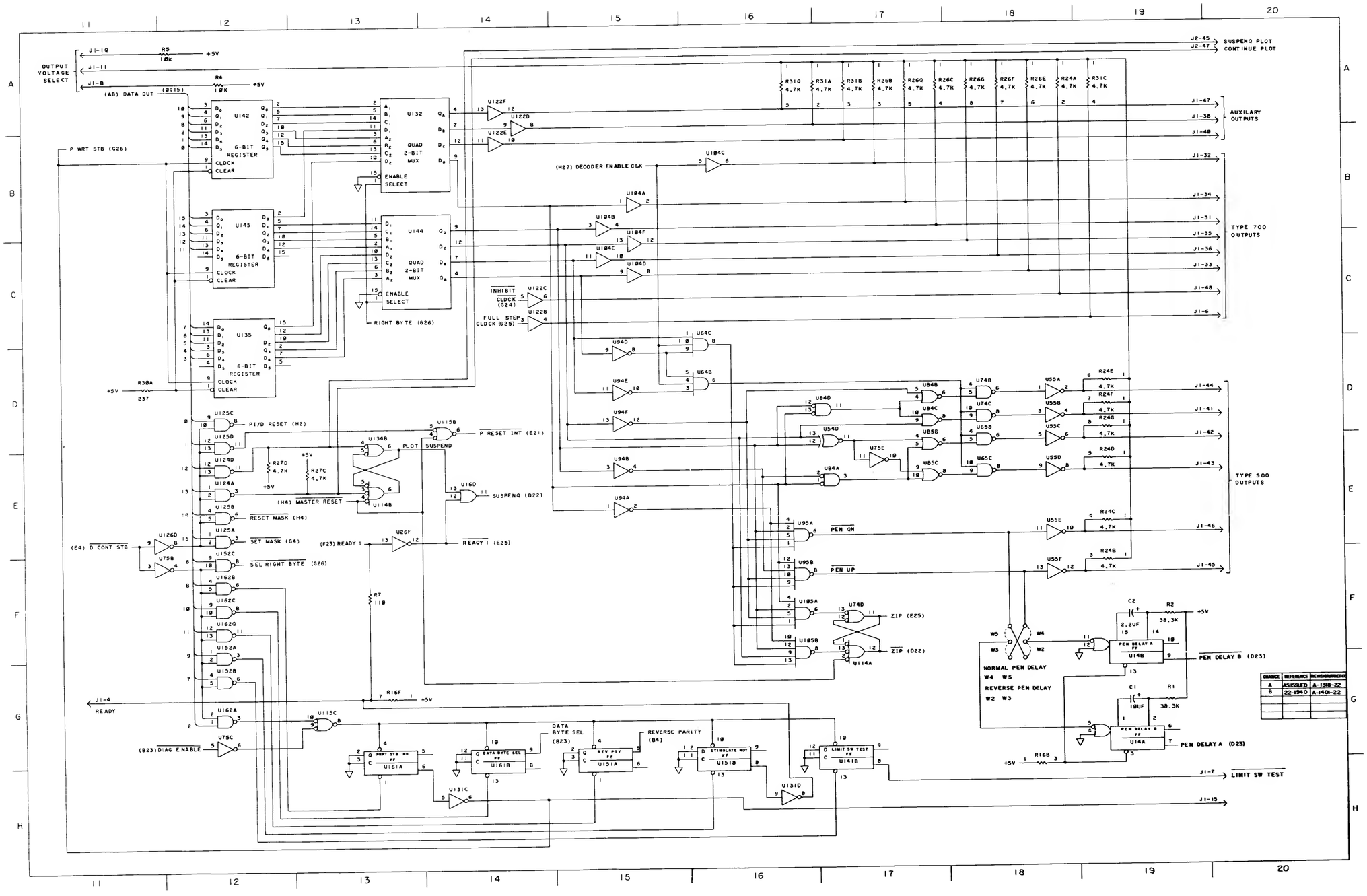

Plotter Interface PCA, 30226-60001, Sheet 2 of 4

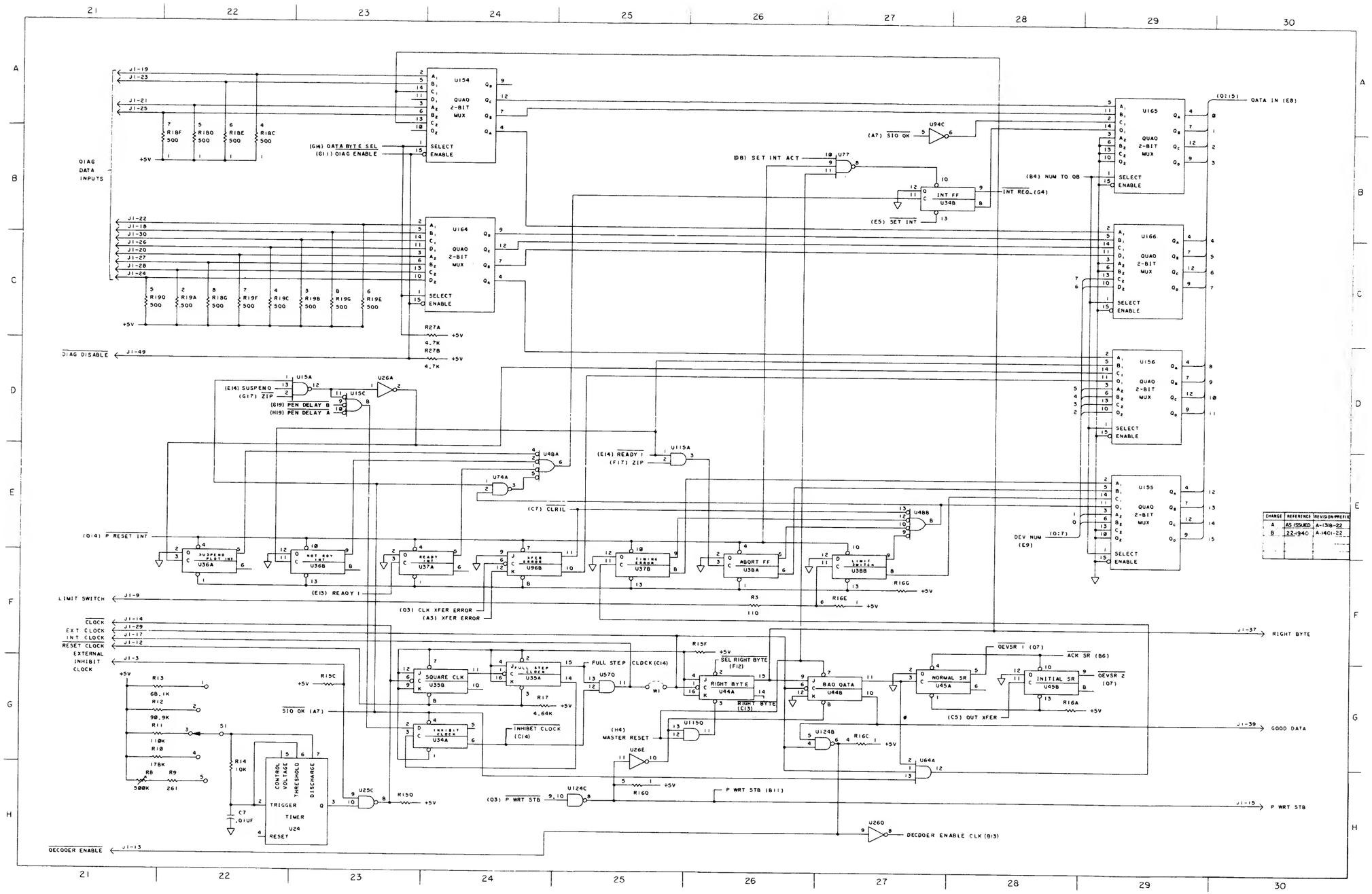

Plotter Interface PCA, 30226-60001, Sheet 3 of 4

	REVISIONS	APPROVED	DATE
A	AS ISSUED	[illegible]	1 Jan 73
B	CHG + PLACE FOR C2 AND C6	GD [illegible]	12-18-73
C	PCO. 22-1940. DATE CODE WAS A-1318	GD [illegible]	1-14-74
D	ADDED 30372A006 USAGE	[illegible]	[illegible]
E	PCO-22-2813, REMOVED W4 & W5, ADD ITEM 9, DATE CODE WAS A-1401-22	GDI [illegible]	8-29-75

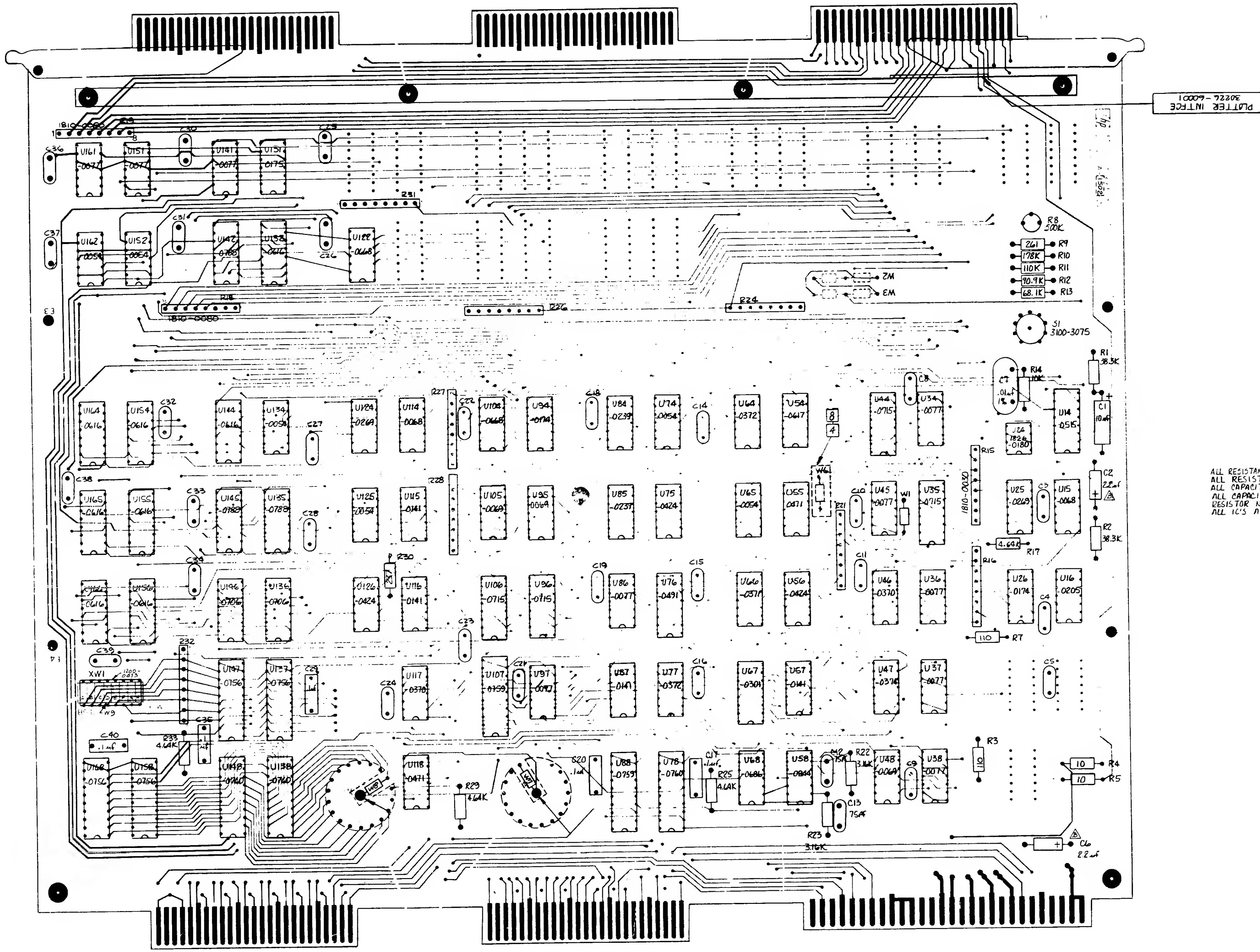

ALL RESISTANCE IN OHMS
ALL RESISTORS 1/8W 1%
ALL CAPACITANCE IN MICROFARADS.
ALL CAPACITORS .01 CER DISC.
RESISTOR NETWORKS — 1810-0125
ALL IC'S ARE 1820-

Plotter Interface PCA, 30226-60001, Sheet 4 of 4

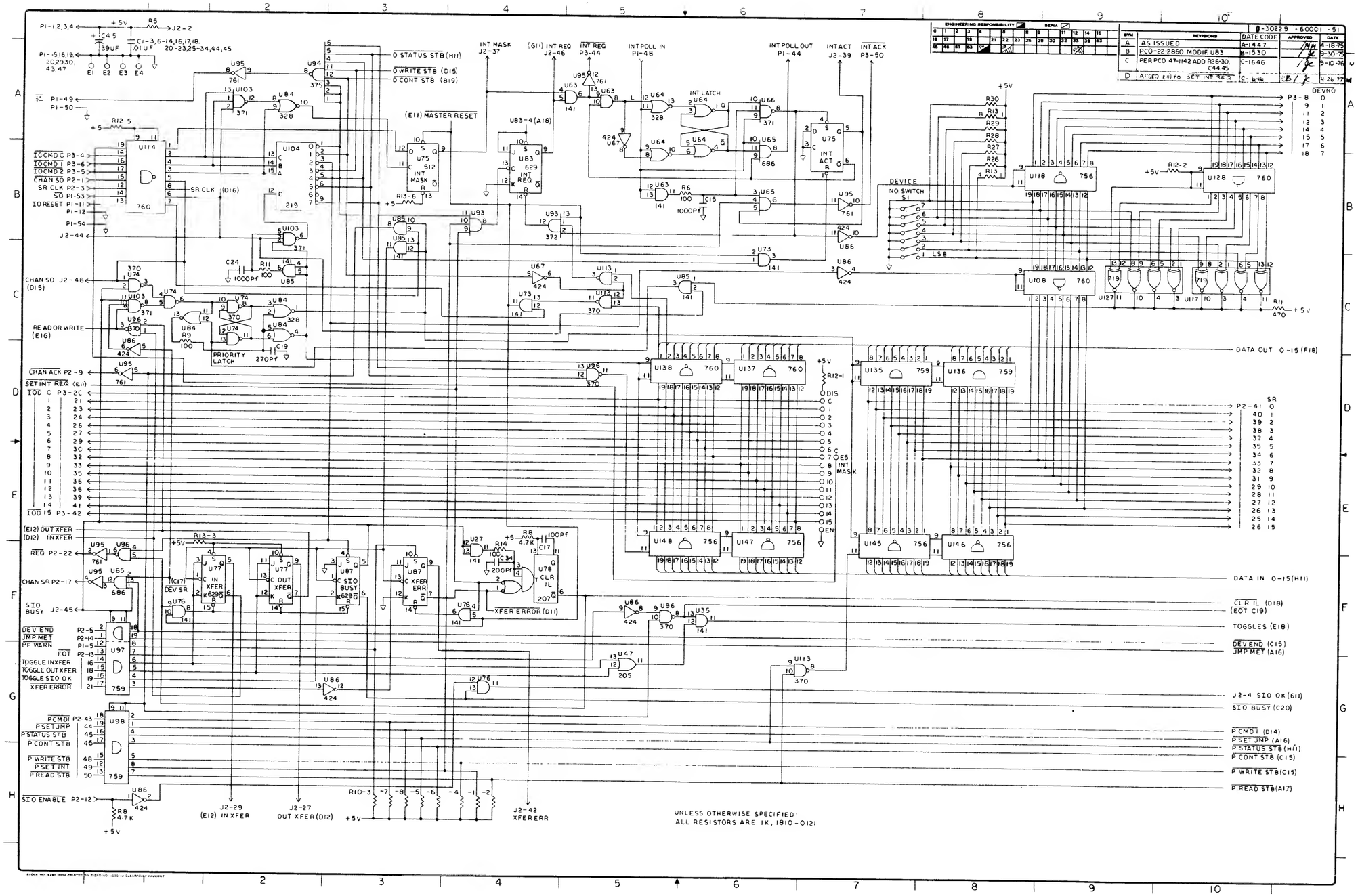

Cartridge Disc Interface PCA, 30229-60001, Sheet 1 of 3

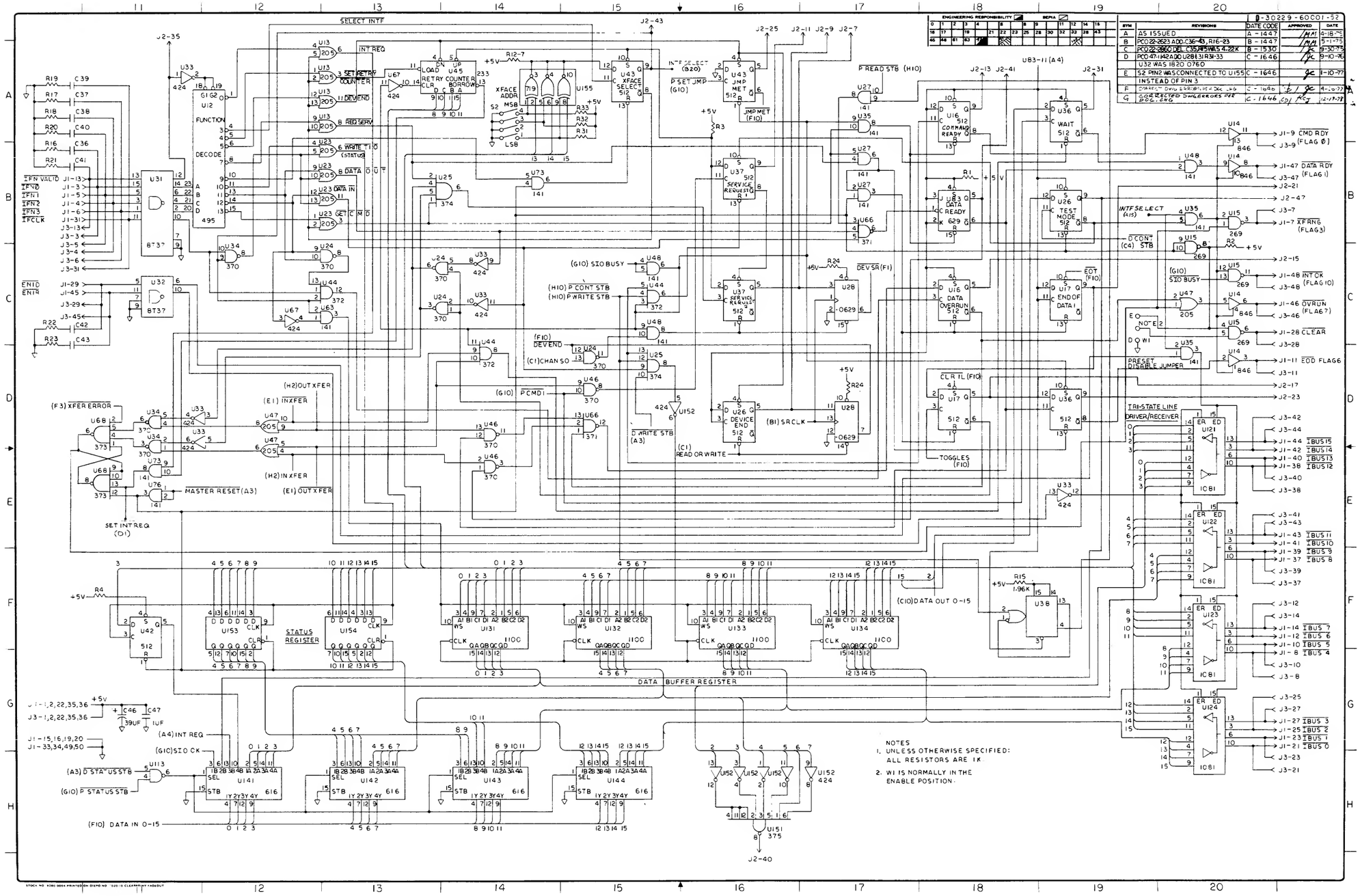

Cartridge Disc Interface PCA, 30229-60001, Sheet 2 of 3

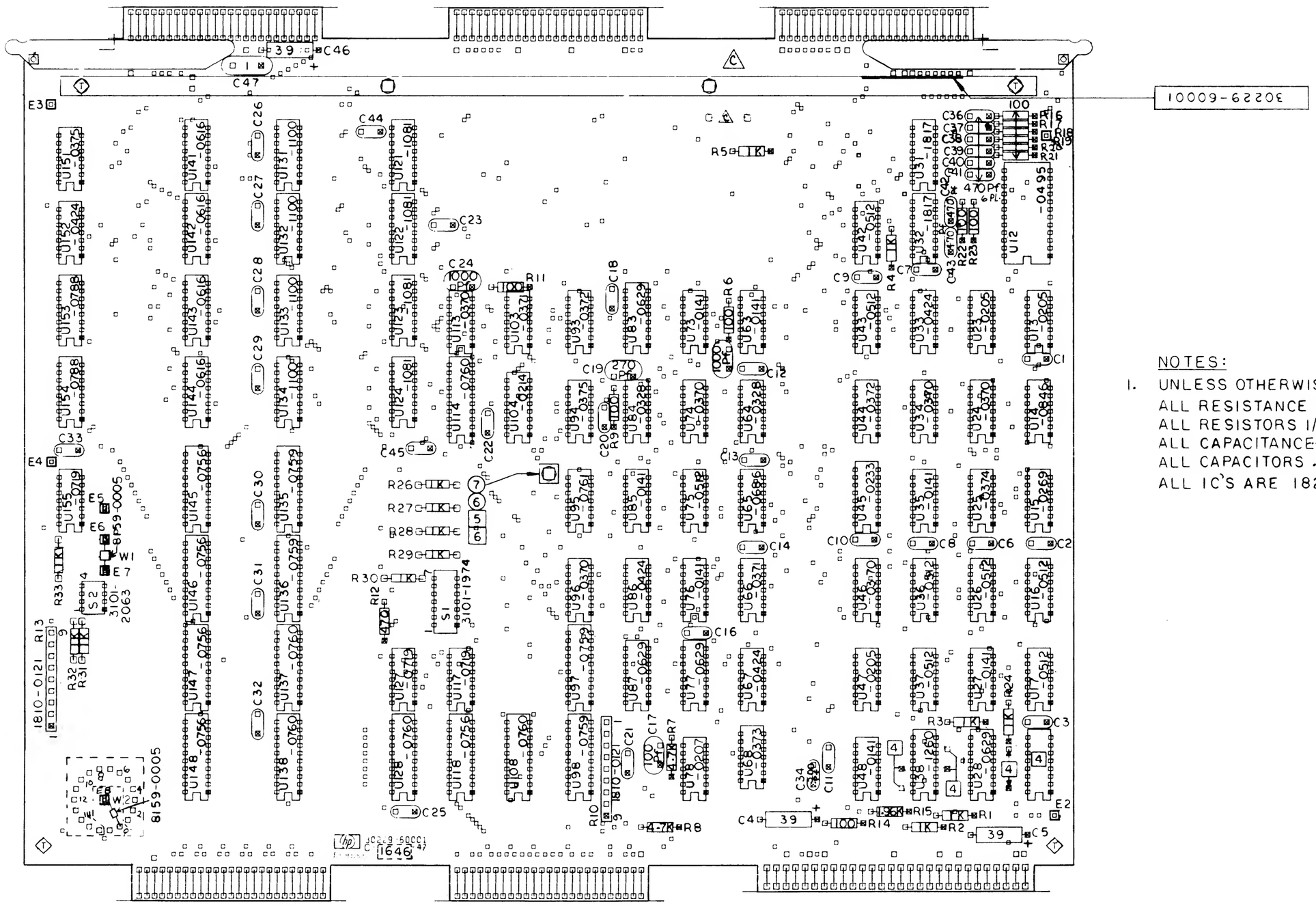

NOTES:

1. UNLESS OTHERWISE SPECIFIED
   ALL RESISTANCE IN OHMS
   ALL RESISTORS 1/4W 5%
   ALL CAPACITANCE IN MICROFARADS
   ALL CAPACITORS .01 CERAMIC DISC
   ALL IC'S ARE 1820- ———

Cartridge Disc Interface PCA, 30229-60001, Sheet 3 of 3

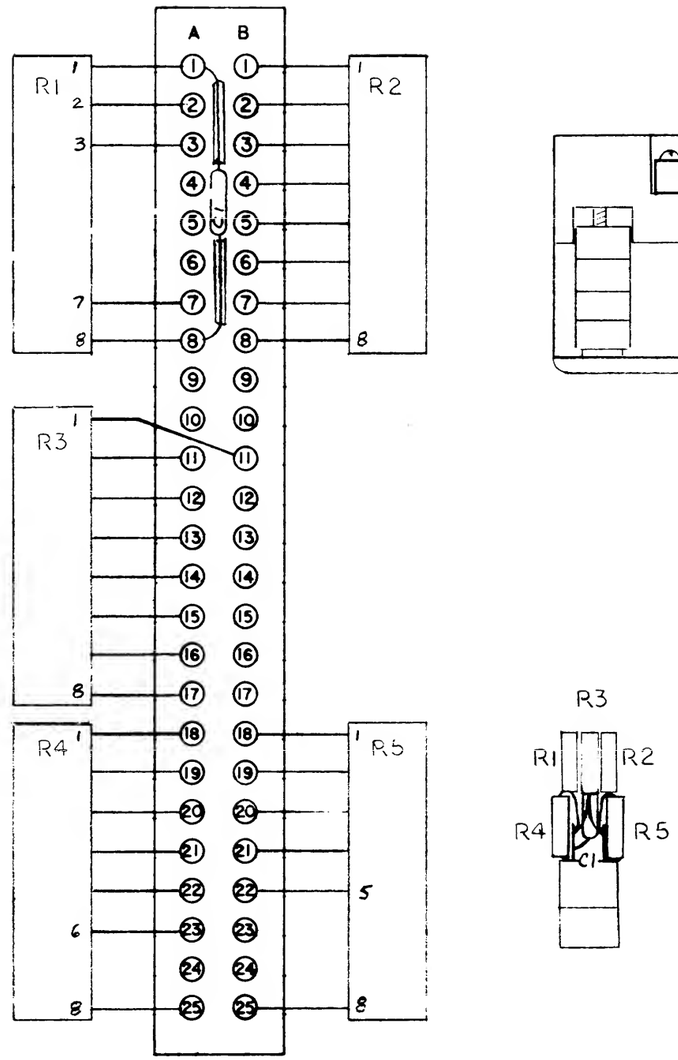

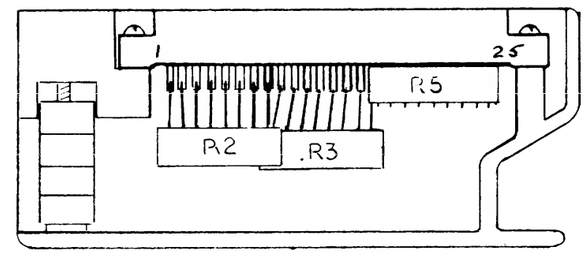

Cartridge Disc Terminator, 30229-60003, Sheet 1 of 1

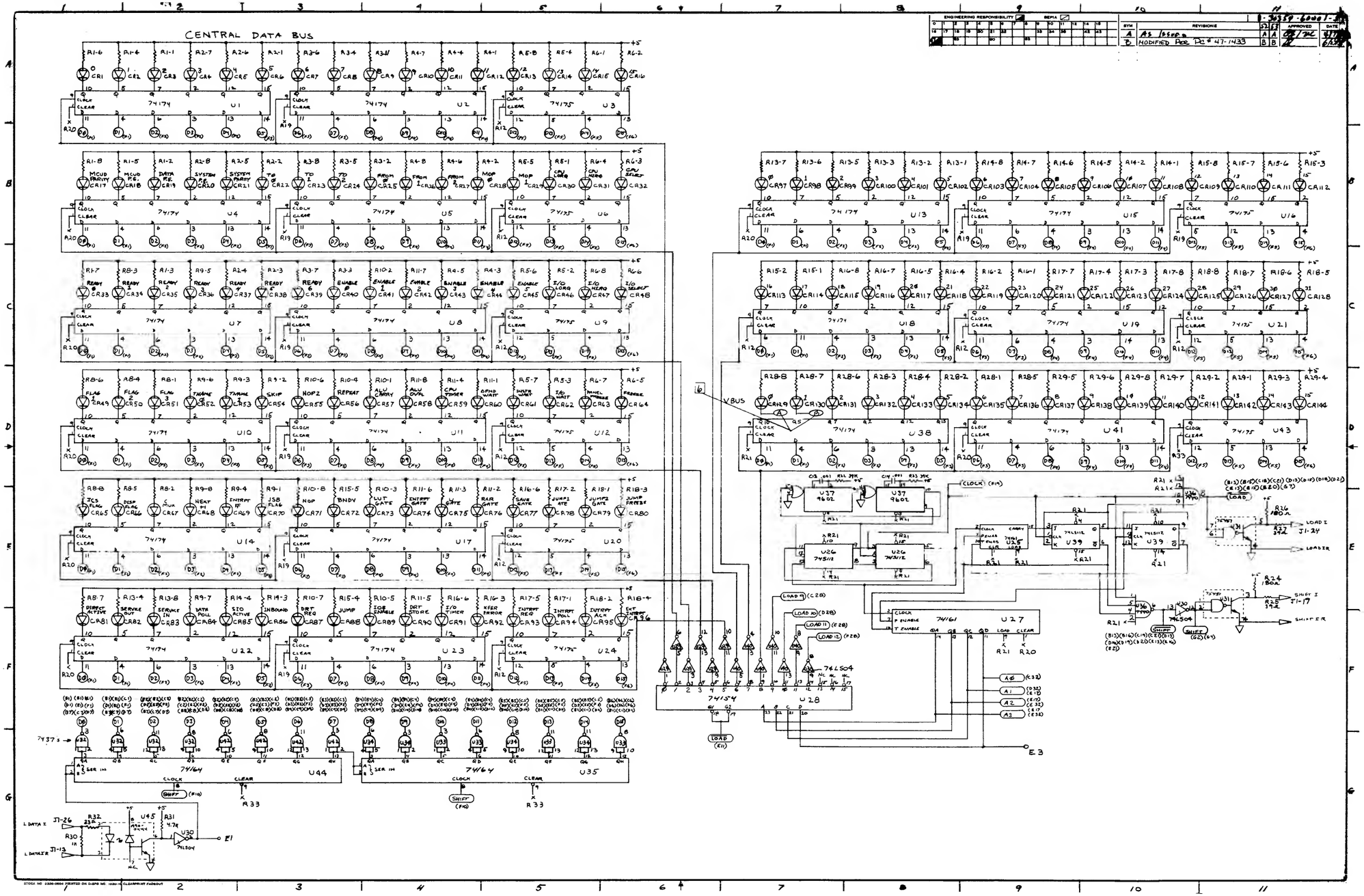

Maintenance Panel Assembly PCA, 30354-60001, Sheet 1 of 4

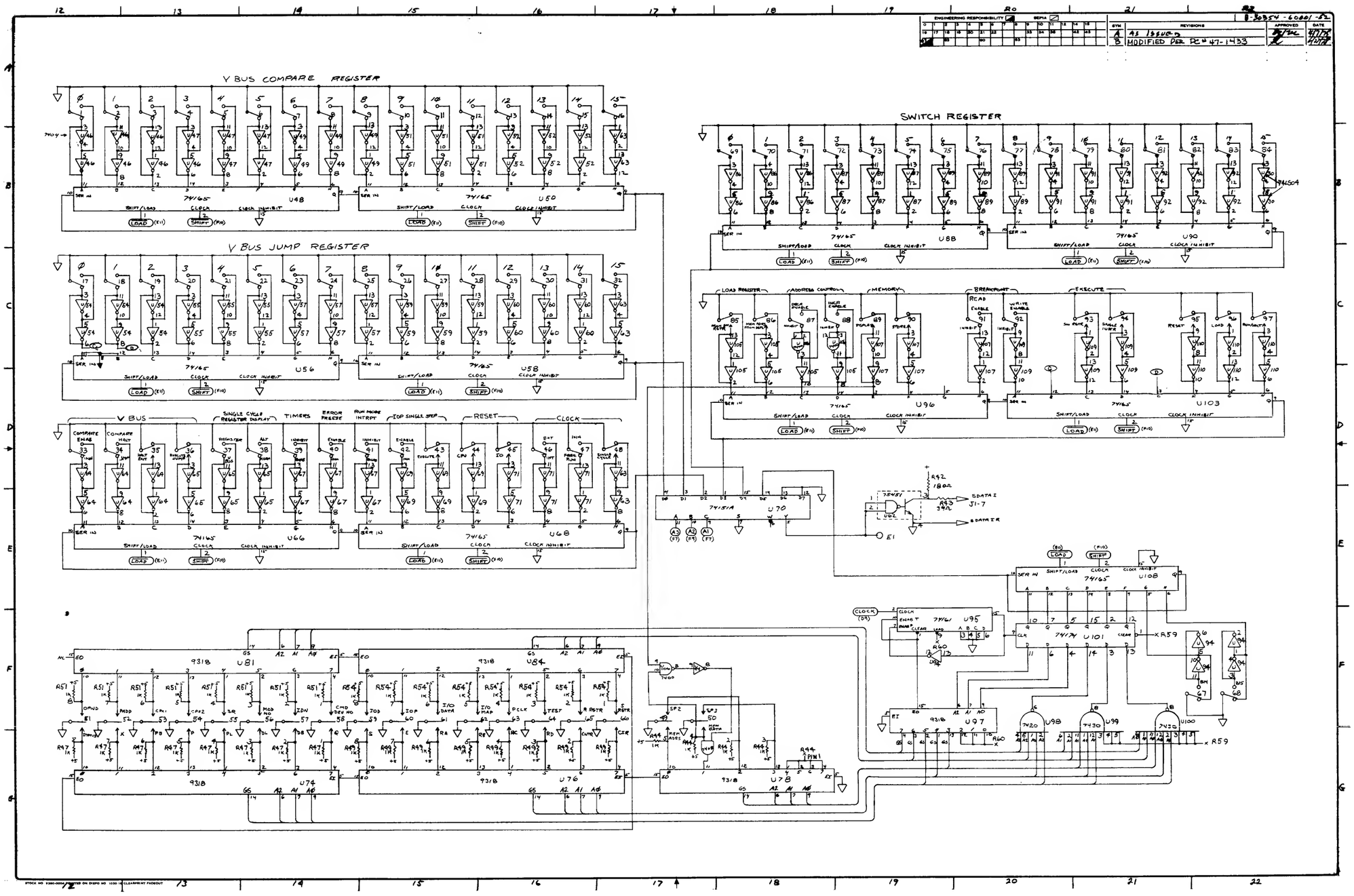

Maintenance Panel Assembly PCA, 30354-60001, Sheet 2 of 4

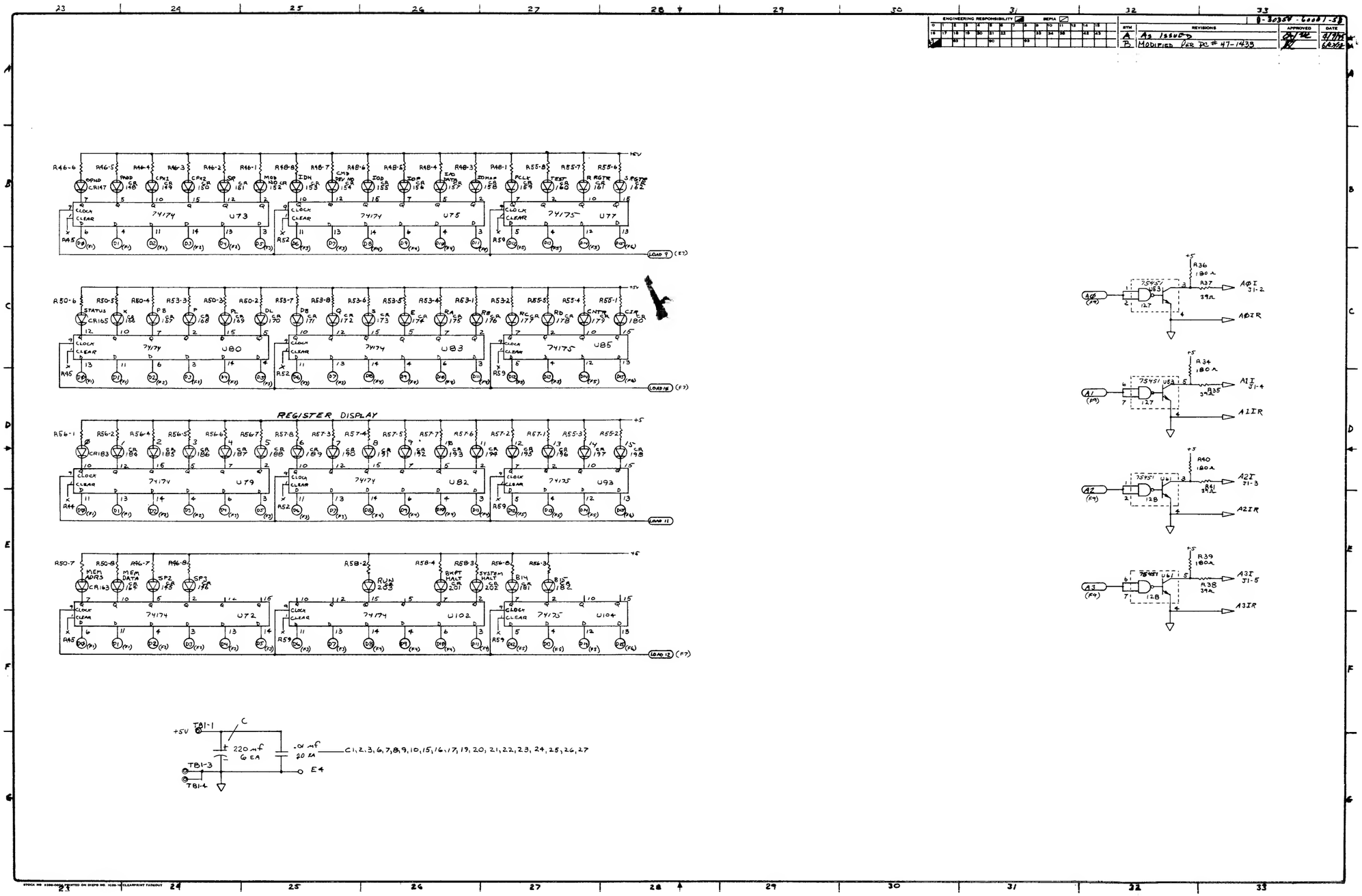

Maintenance Panel Assembly PCA, 30354-60001, Sheet 3 of 4

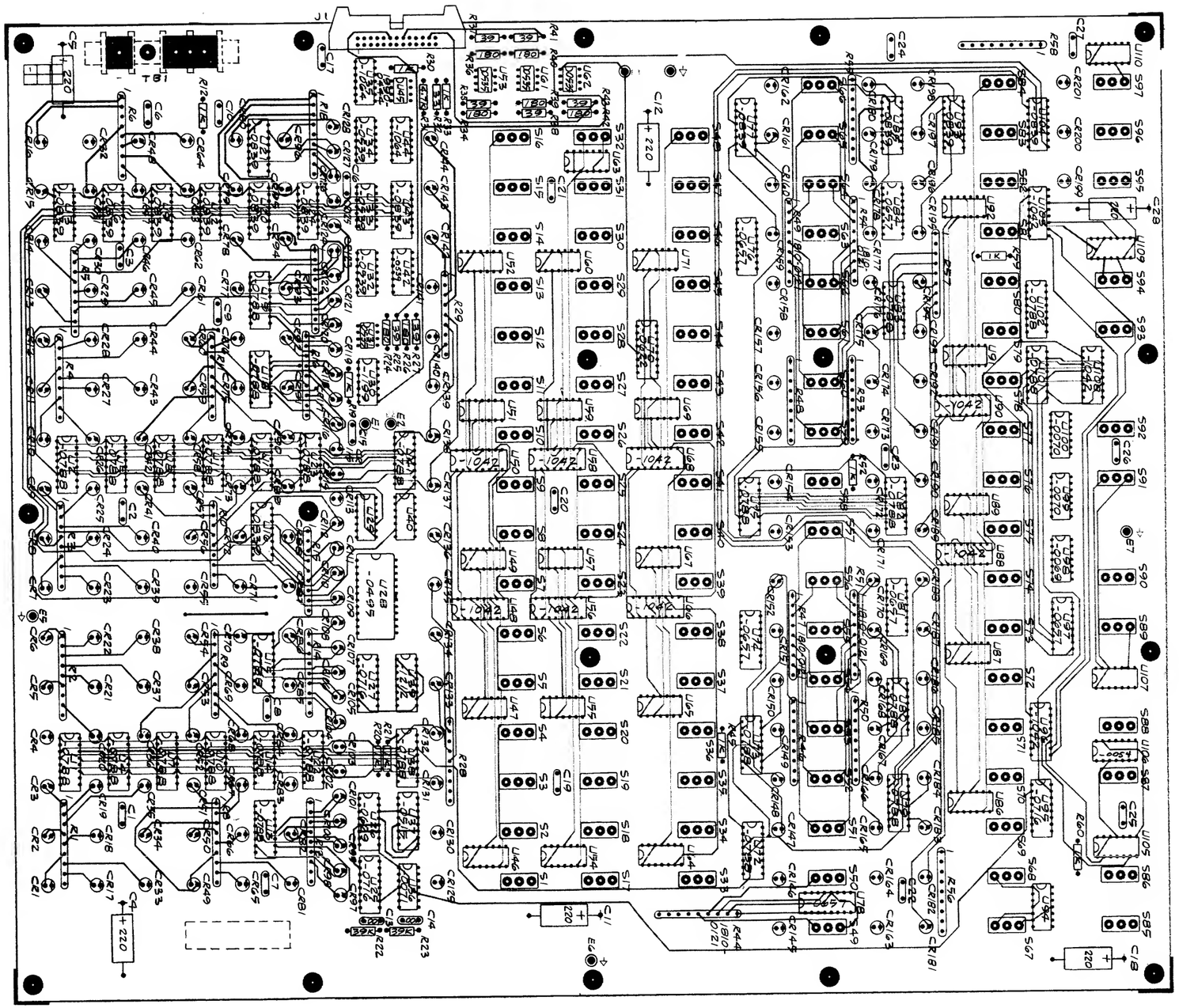

NOTES:

1. UNLESS OTHERWISE SPECIFIED:
   ALL RESISTANCE IN OHMS
   ALL RESISTORS ARE 1/4 W, 5%
   ALL CAPACITANCE IN MICROFARADS
   ALL CAPACITORS ARE .01 CERAMIC DISC
   ALL DIODES ARE 1990-0410
   ALL RESISTOR NETWORKS ARE 200 SL 1810-0163
   ALL I.C.'S ARE 1820-0174
   ALL SWITCHES ARE 3101-1967 (CK 7101-TOGGLE)
   S49-S66 ARE 3101-1968 (CK 7105-CENTER OFF)
   S35, 36, 43-45, 48, 85, 86, 89, 90, 93-97 ARE 3101-1966 (CK 7108-MOMENTARY)

Maintenance Panel Assembly PCA, 30354-60001, Sheet 4 of 4

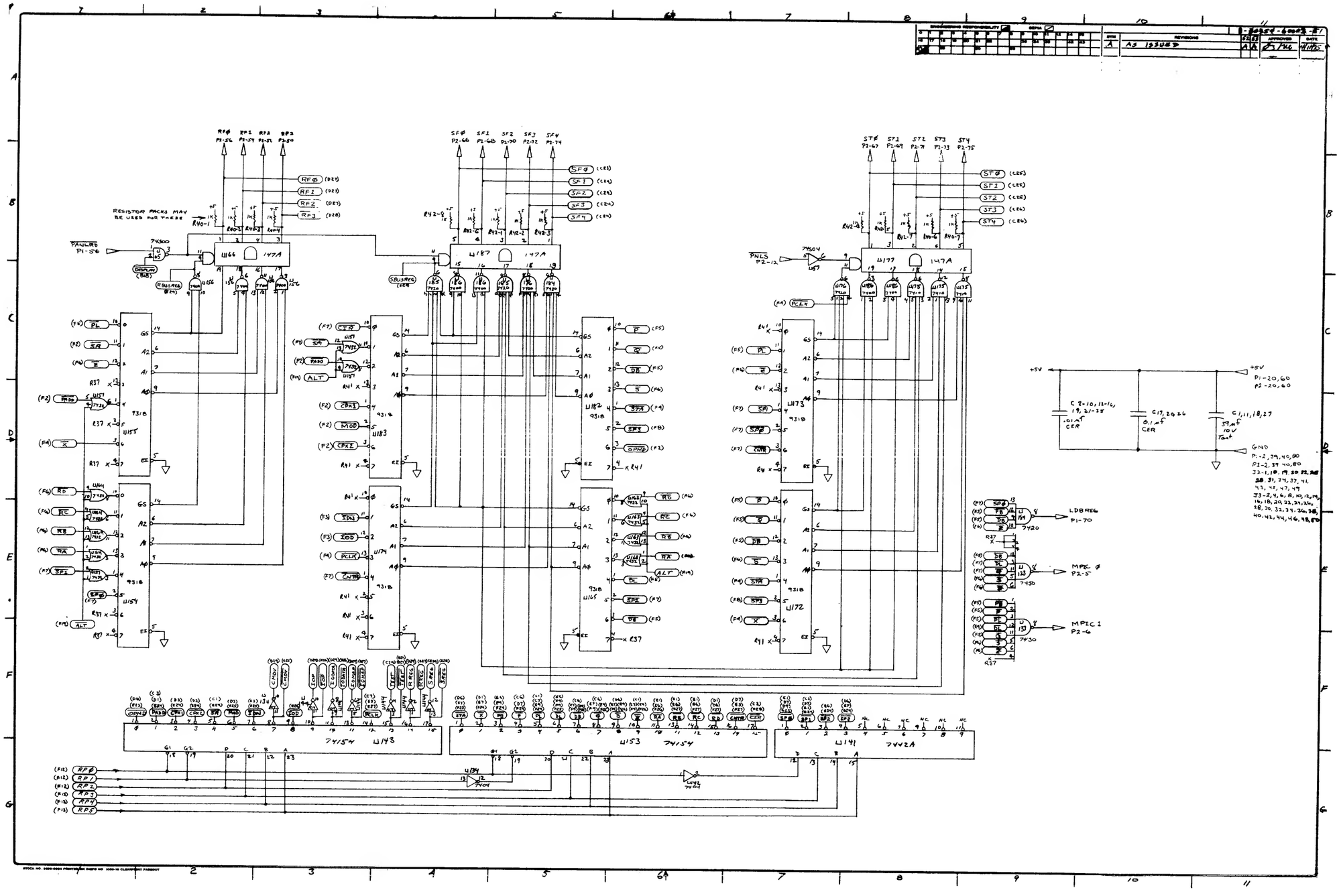

Maintenance Panel Interface PCA, 30354-60003, Sheet 1 of 5

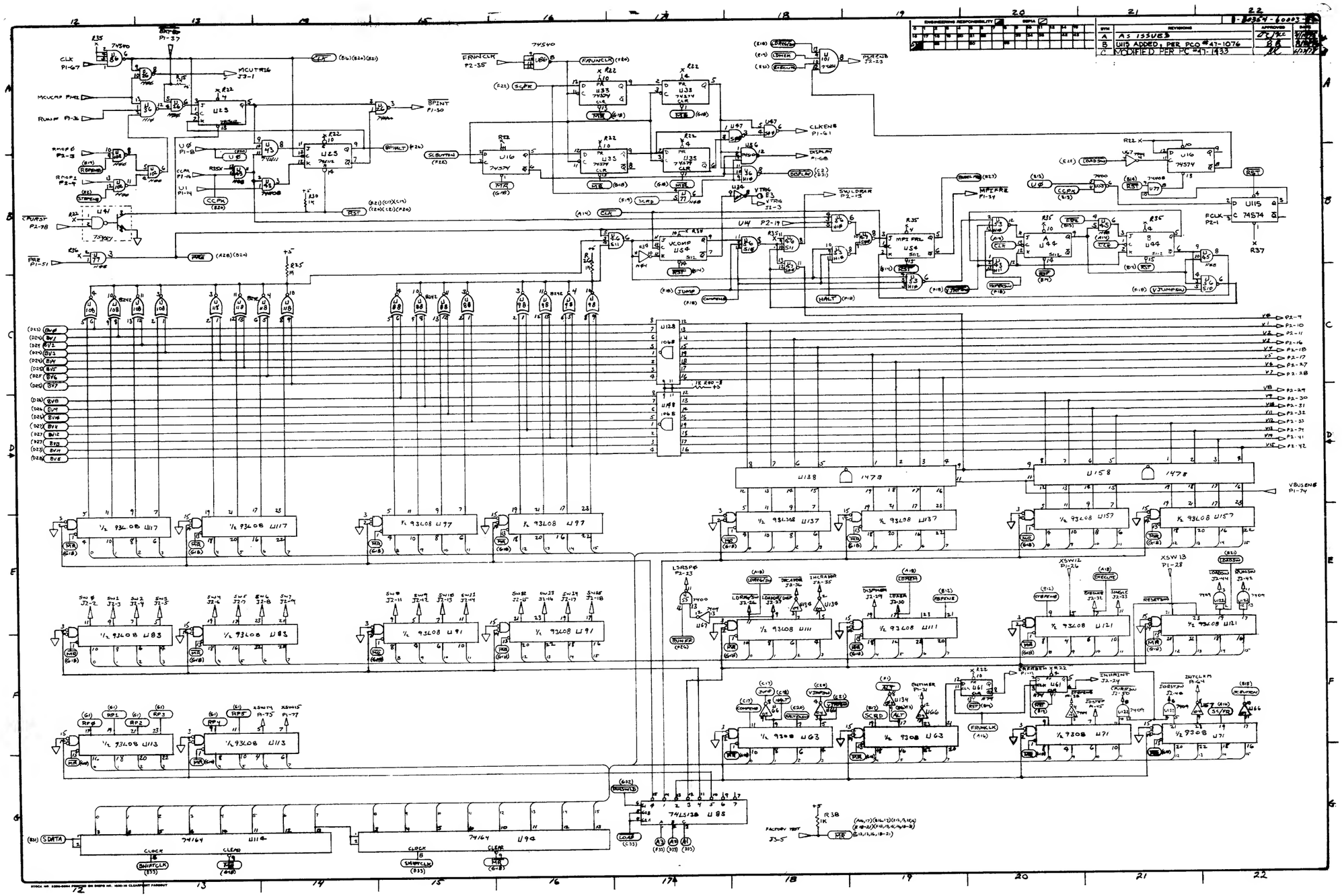

Maintenance Panel Interface PCA, 30354-60003, Sheet 2 of 5

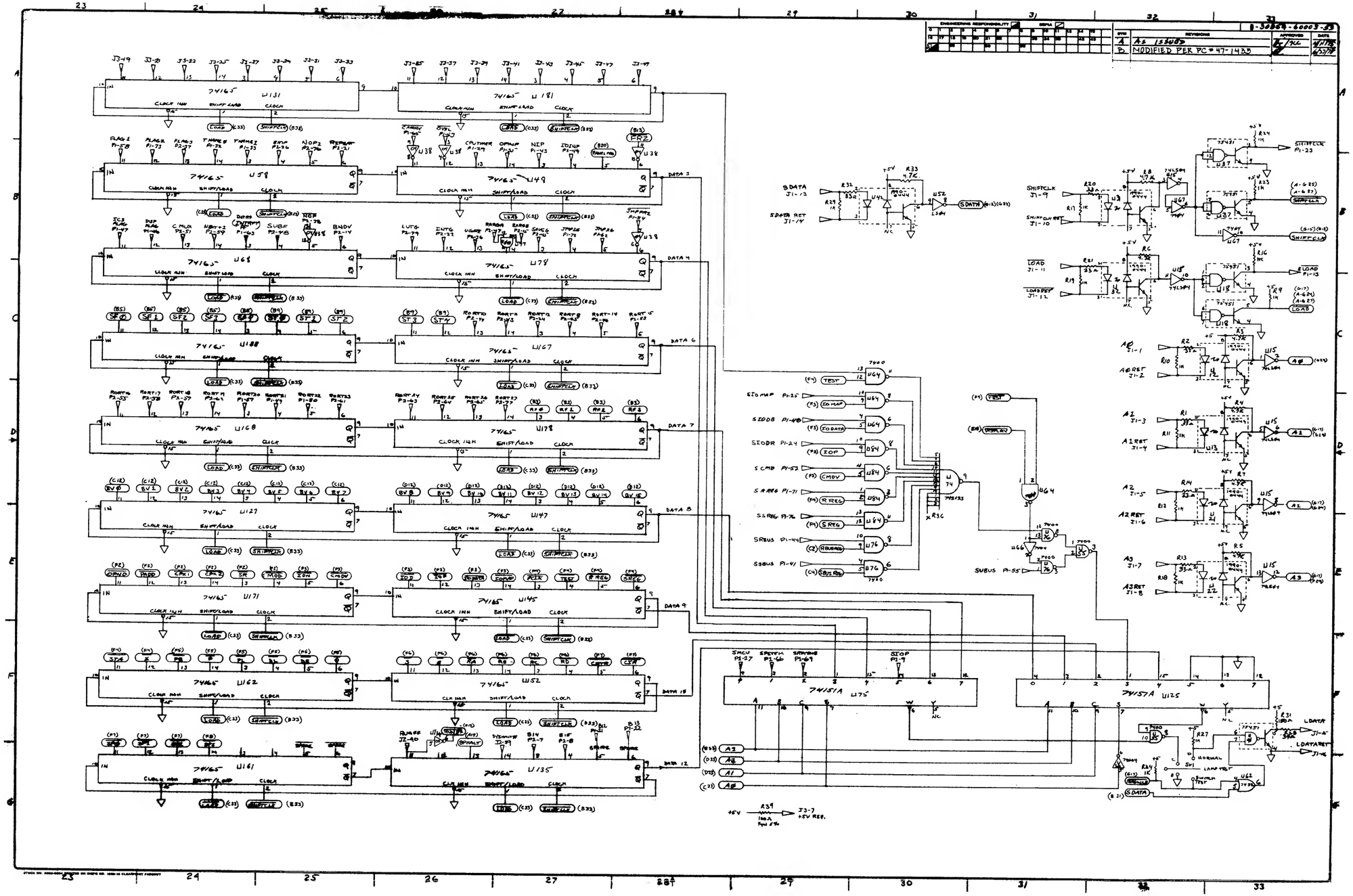

Maintenance Panel Interface PCA, 30354-60003, Sheet 3 of 5

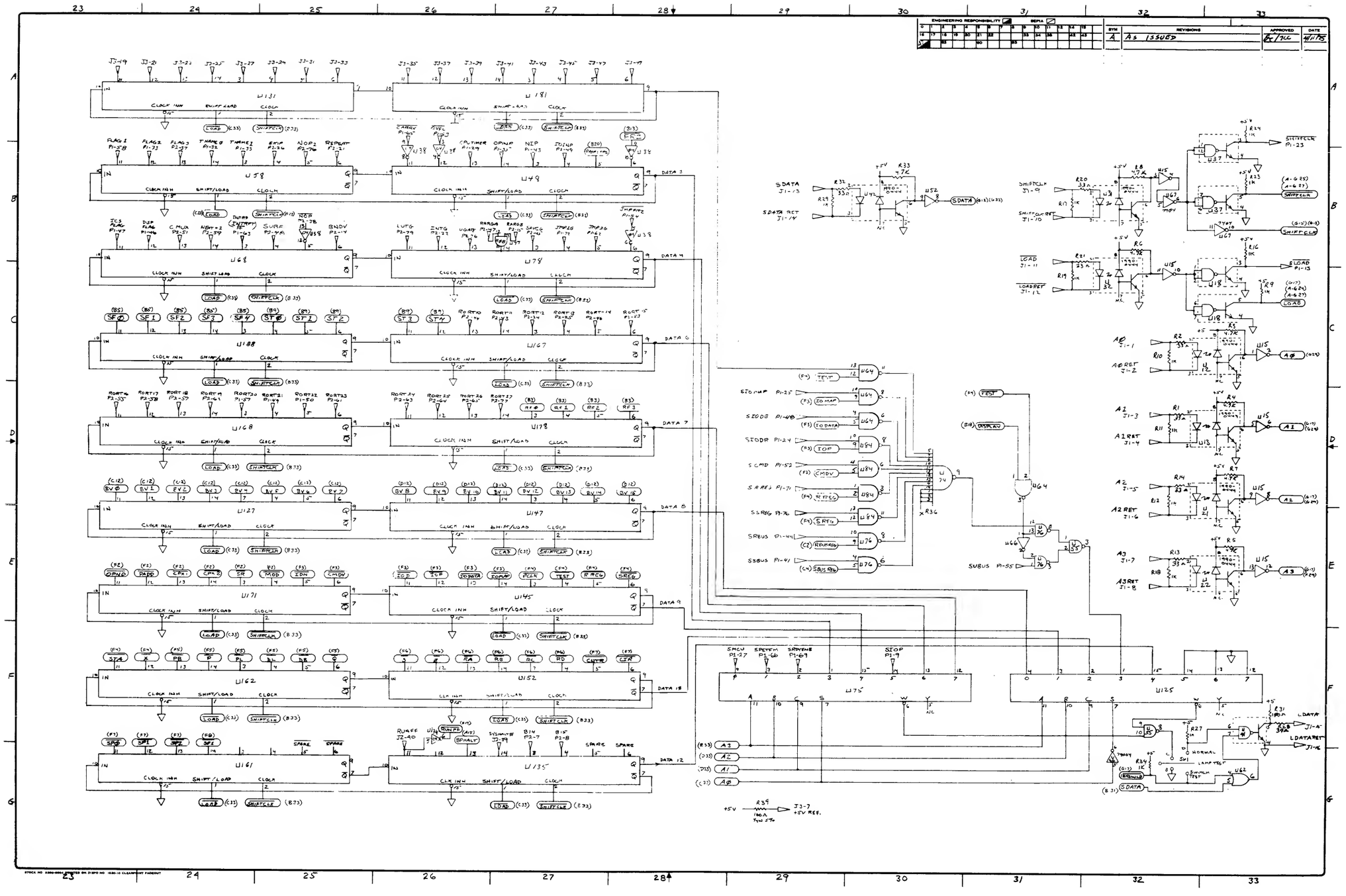

Maintenance Panel Interface PCA, 30354-60003, Sheet 4 of 5

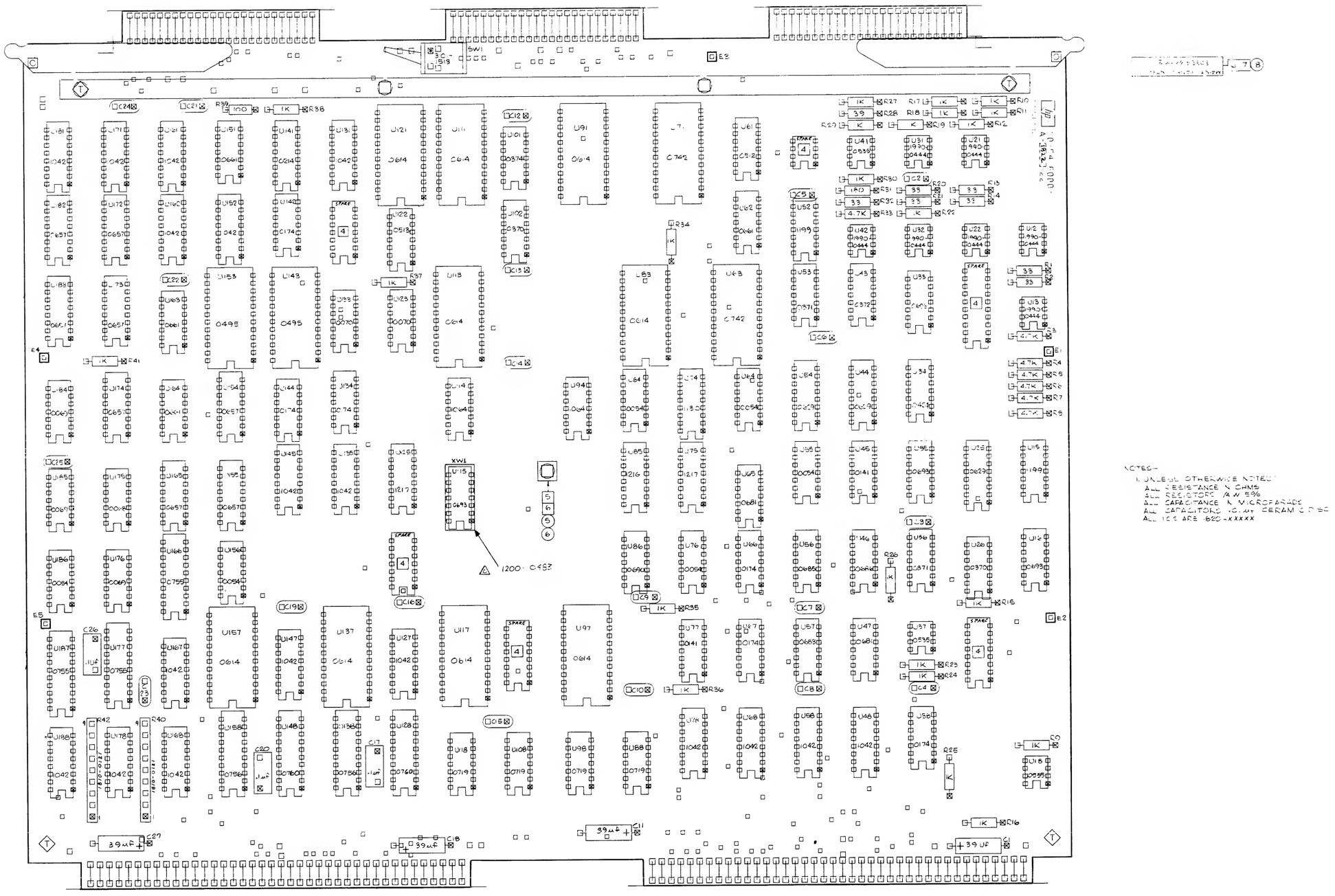

Maintenance Panel Interface PCA, 30354-60003, Sheet 5 of 5

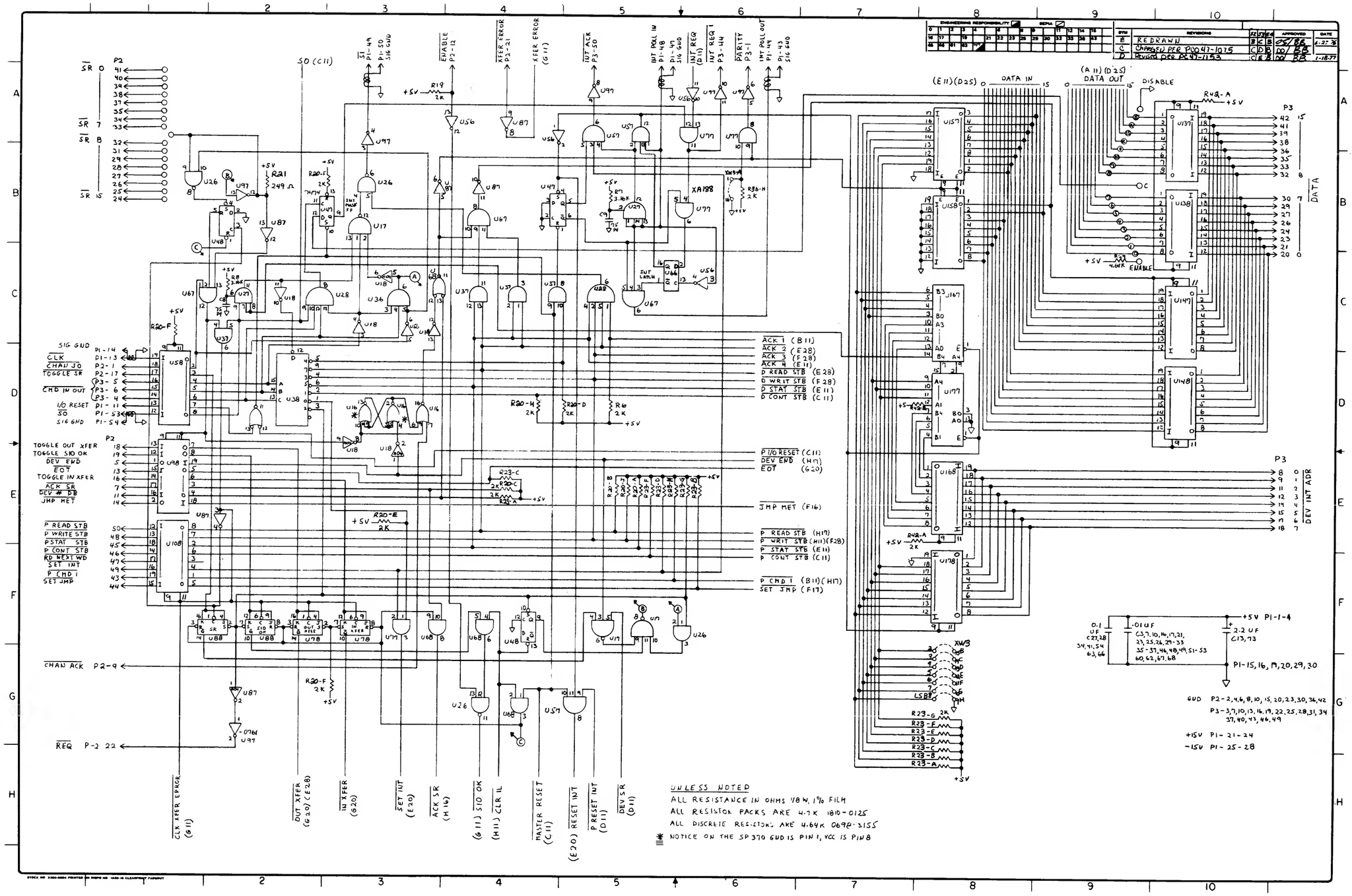

Hardwired Serial Interface, 30360-60001, Sheet 1 of 5

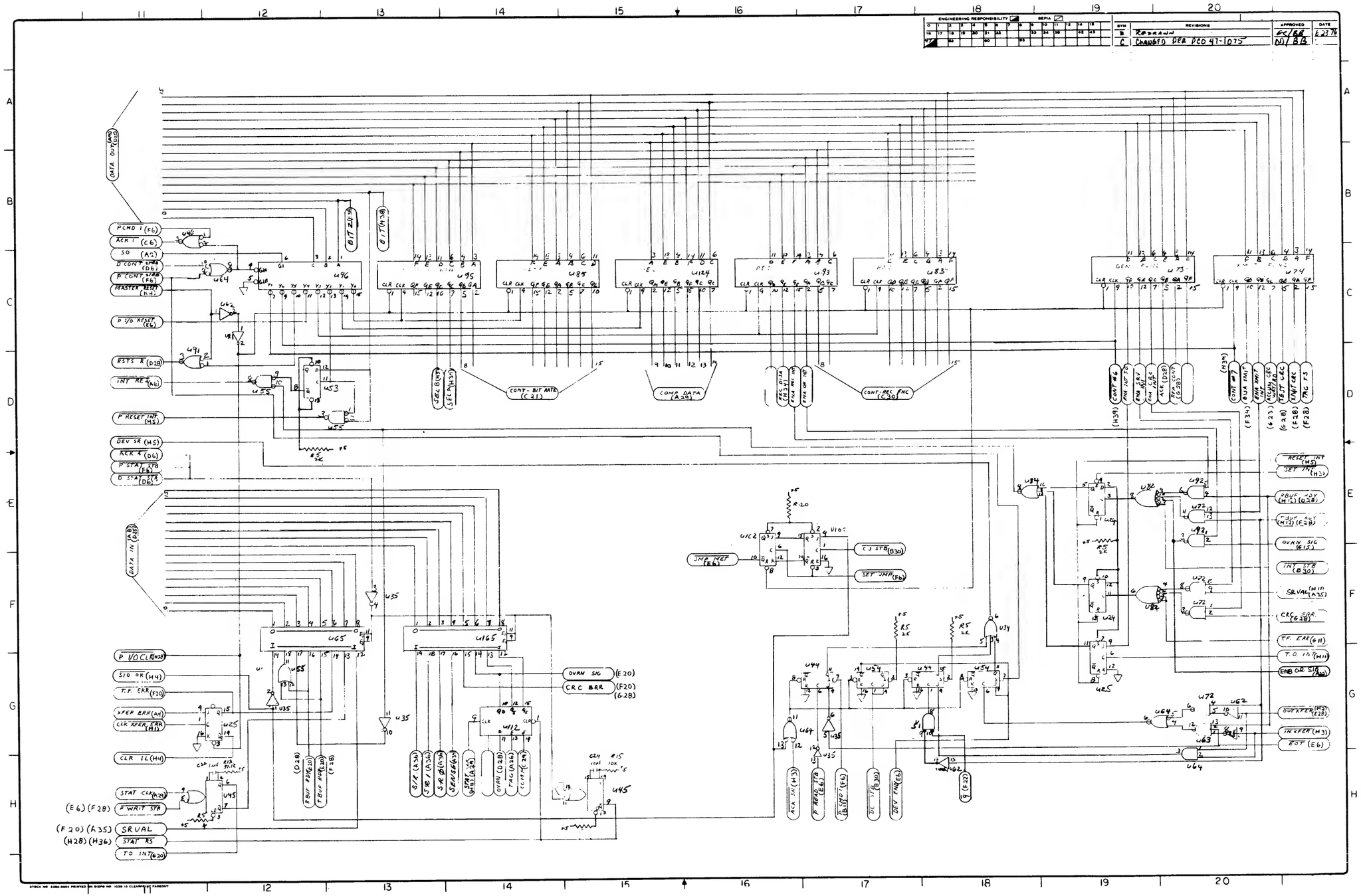

Hardwired Serial Interface, 30360-60001, Sheet 2 of 5

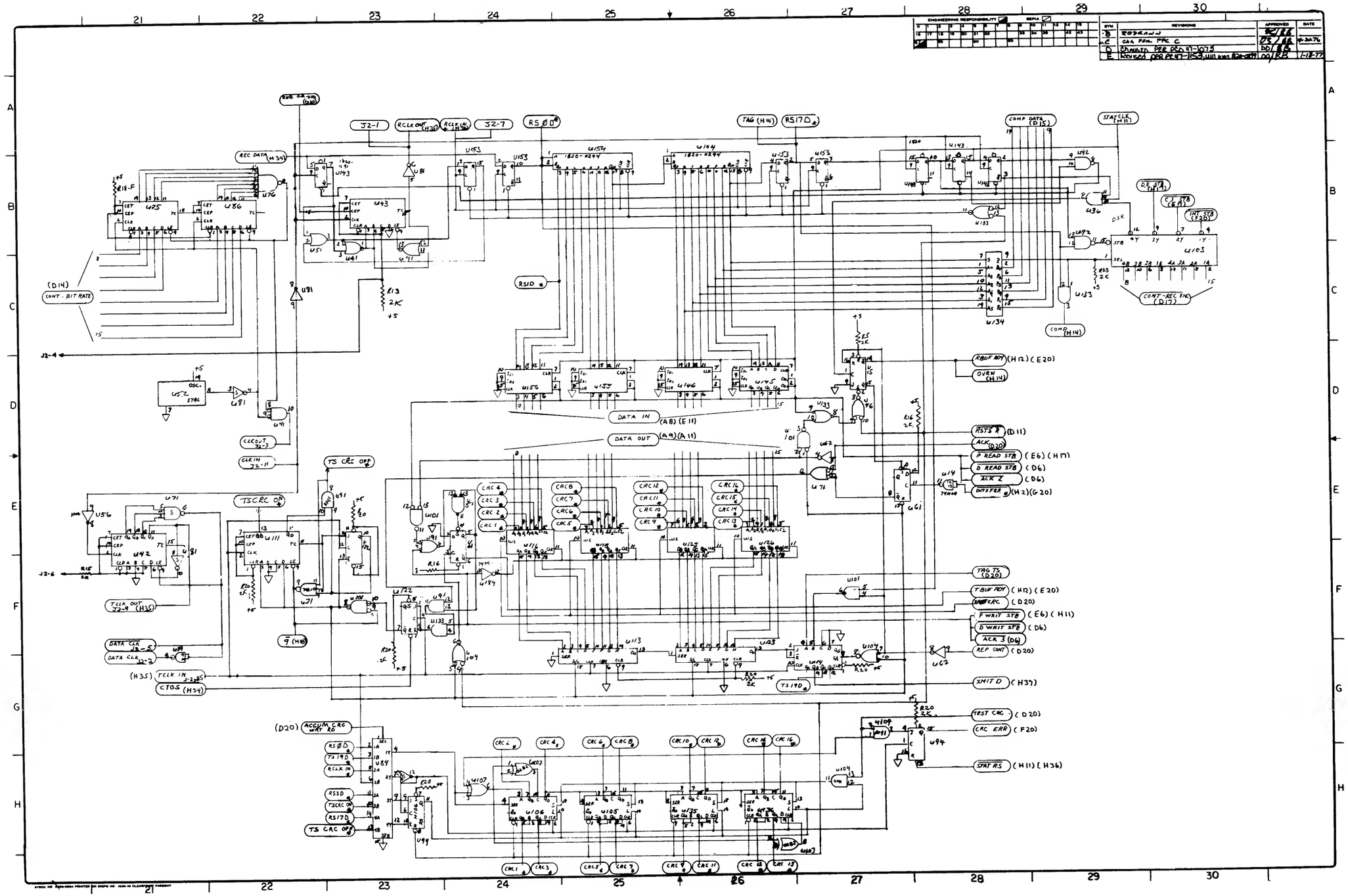

Hardwired Serial Interface, 30360-60001, Sheet 3 of 5

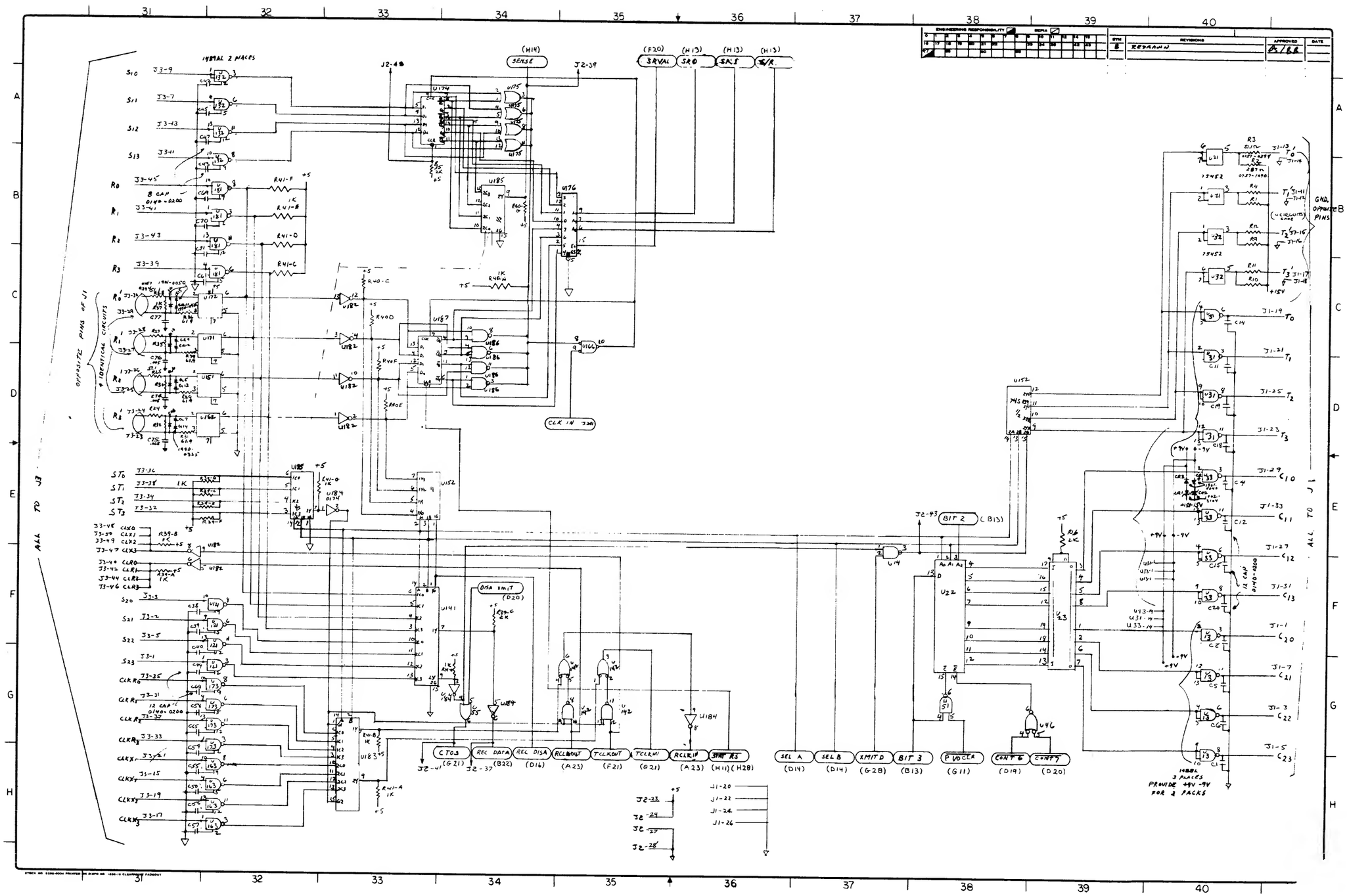

Hardwired Serial Interface, 30360-60001, Sheet 4 of 5

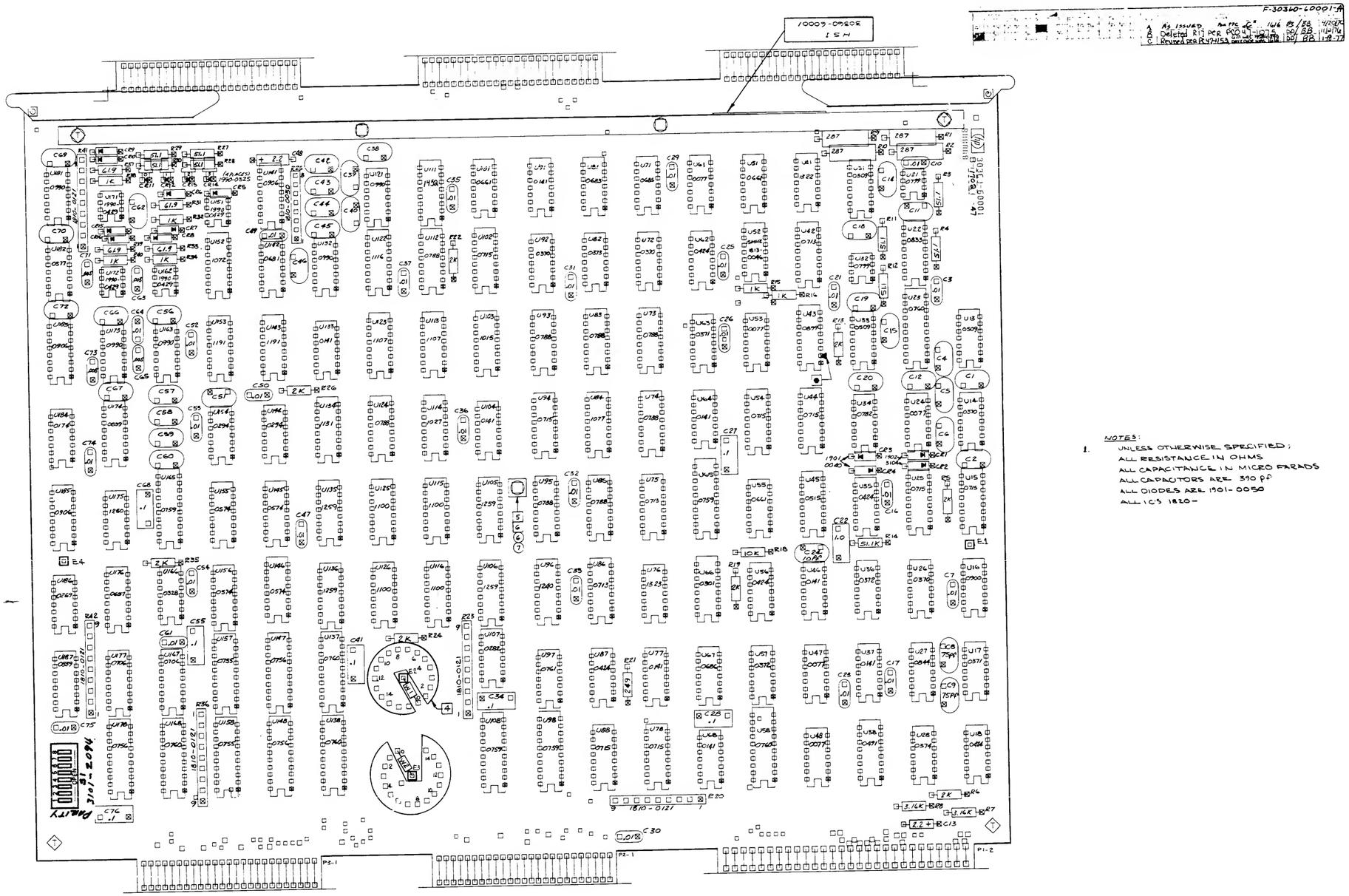

NOTES:

1. UNLESS OTHERWISE SPECIFIED;
   ALL RESISTANCE IN OHMS
   ALL CAPACITANCE IN MICRO FARADS
   ALL CAPACITORS ARE 390 pF
   ALL DIODES ARE 1901-0050
   ALL ICS 1820-

Hardwired Serial Interface, 30360-60001, Sheet 5 of 5

SECTION IV - INDIVIDUAL POWER SUPPLIES

CONTENTS

NUMBER	DESCRIPTION
(None)	32421A--30310A Power Supply, Exploded View
30310-60002	A1, Preregulator
30310-60003	A2, Inverter Driver
30310-60004	A3, 20-Volt Supply
30310-60005	A4, Current Limit
30310-60006	A5, Voltage Protect
30310-60011	A6, 5V/30V Rectifier
30310-60007	A7, Inverter
30310-60014	A8, Deck Assembly
30310-60010	A9, Preregulator
30310-60013	A12, Front Panel of 30310A Supply
30310-60015	A13, Output Crowbar
(None)	"Power Supply, 30310A"
30311-60002	30311A Power Supply, Mother PCA
30311-60003	Control PCA
30311-60005	Heat Sink
30311-60006	Battery Pack
30312-60001	30312A Power Supply, Assembly
30312-60002	30312A Interface
30135-60016	32435A--Power Control Display PCA
30135-60017	DC Power Control PCA

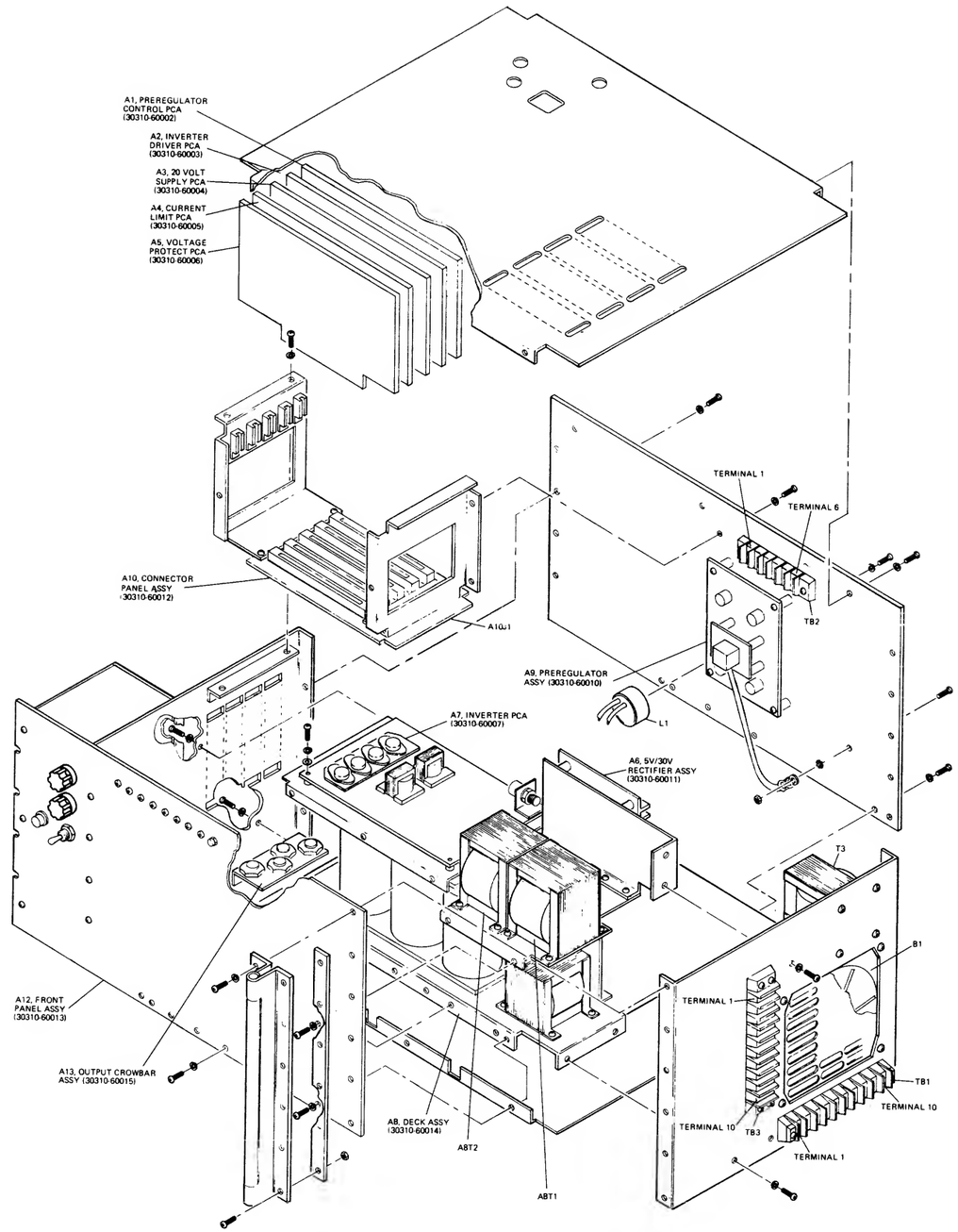

32421A ONLY HP 30310A Power Supply, Exploded View

SYM	REVISIONS	APPROVED	DATE
A	AS ISSUED (A-1210)		3-20-72
B	PCO. 22-2000, CHG. PLACE + FOR C3 CR3 WAS 1901-0033, DATE CODE WAS 1210-22		4-1-74
C	ADDED 303DA001 usage		[illegible]
D	30310-60024 WAS 30310A 22 2779		9 3 75
E	REVISED PER PCO 47-1079	PC	8-18-76
F	DELETE P/N 0380-0305 PCO 47-1116	PC	10/13/76

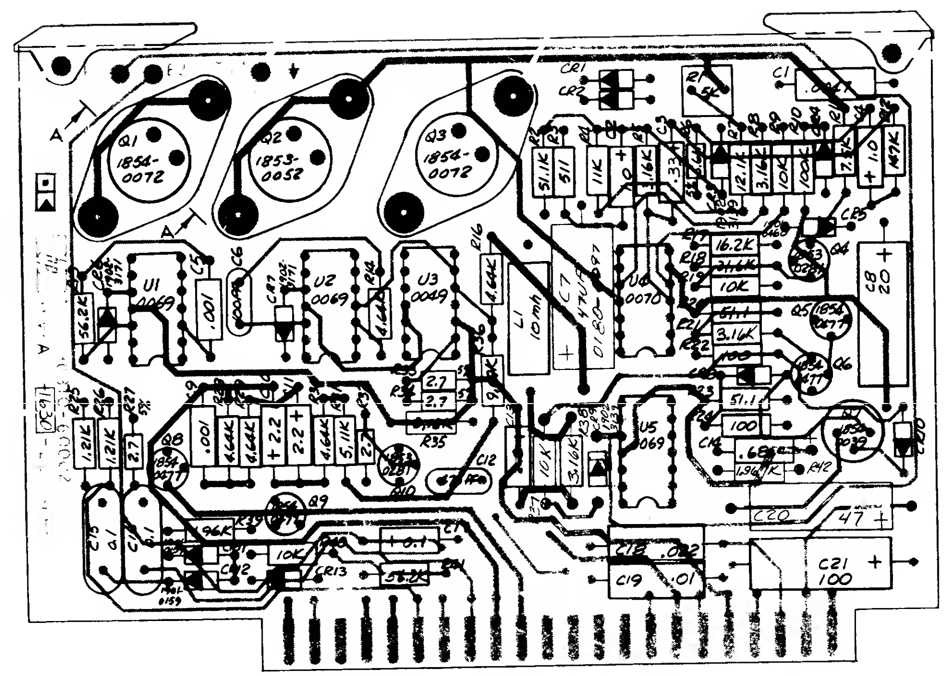

NOTES :

1. UNLESS OTHERWISE SPECIFIED
   ALL RESISTANCE IN OHMS
   ALL RESISTOR 1/4W, ±1%
   ALL CAPACITANCE IN MICROFARADS
   ALL DIODES # 1901-0033
   ALL IC'S ARE # 1826 -

32421A ONLY A1 Preregulator Control PCA, 30310-60002, Sheet 1 of 2

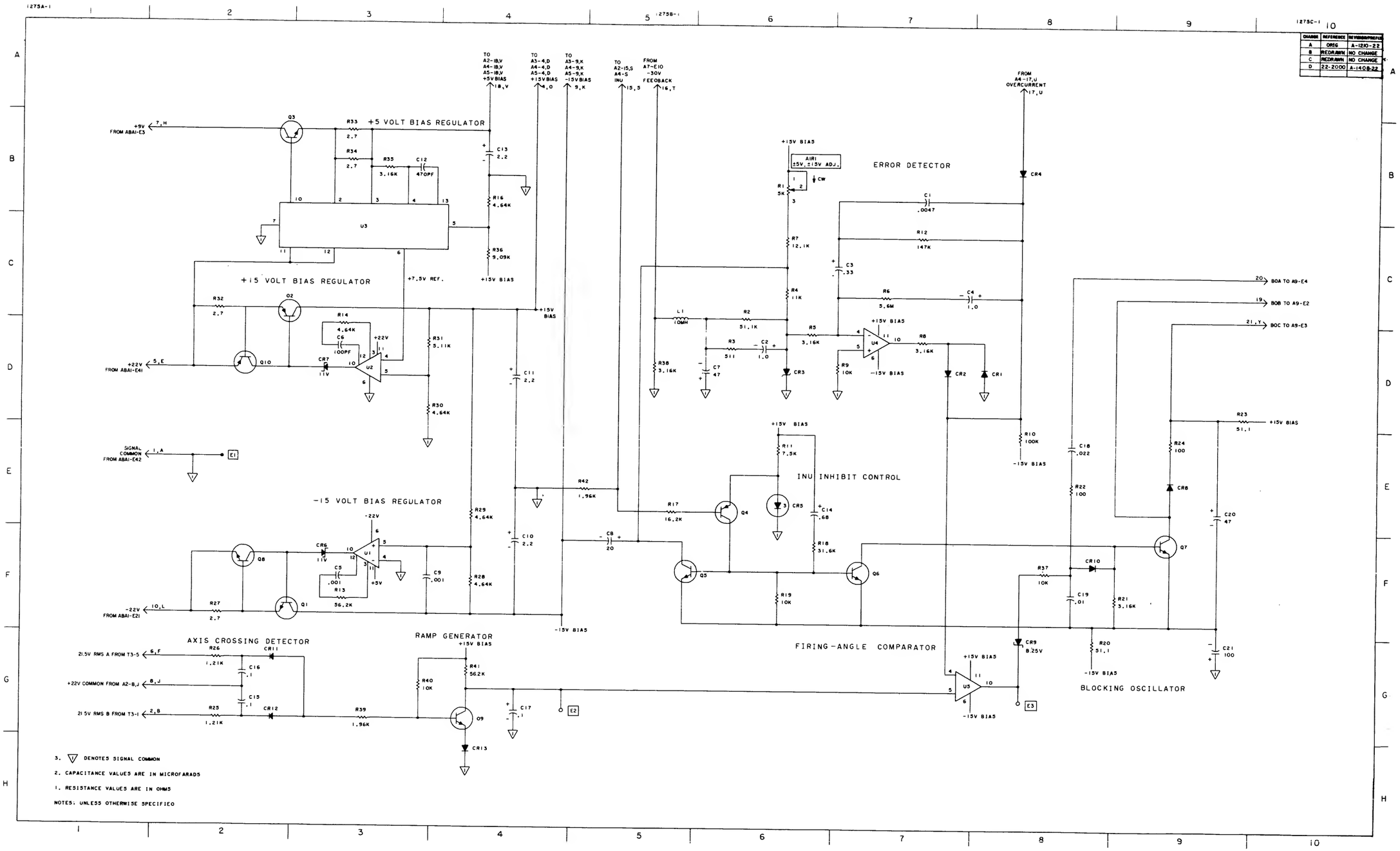

CHANGE	REFERENCE	REVISION/PREFIX
A	ORIG	A-1210-22
B	REDRAWN	NO CHANGE
C	REDRAWN	NO CHANGE
D	22-2000	A-1408-22

32421A ONLY A1 Preregulator Control PCA, 30310-60002, Sheet 2 of 2

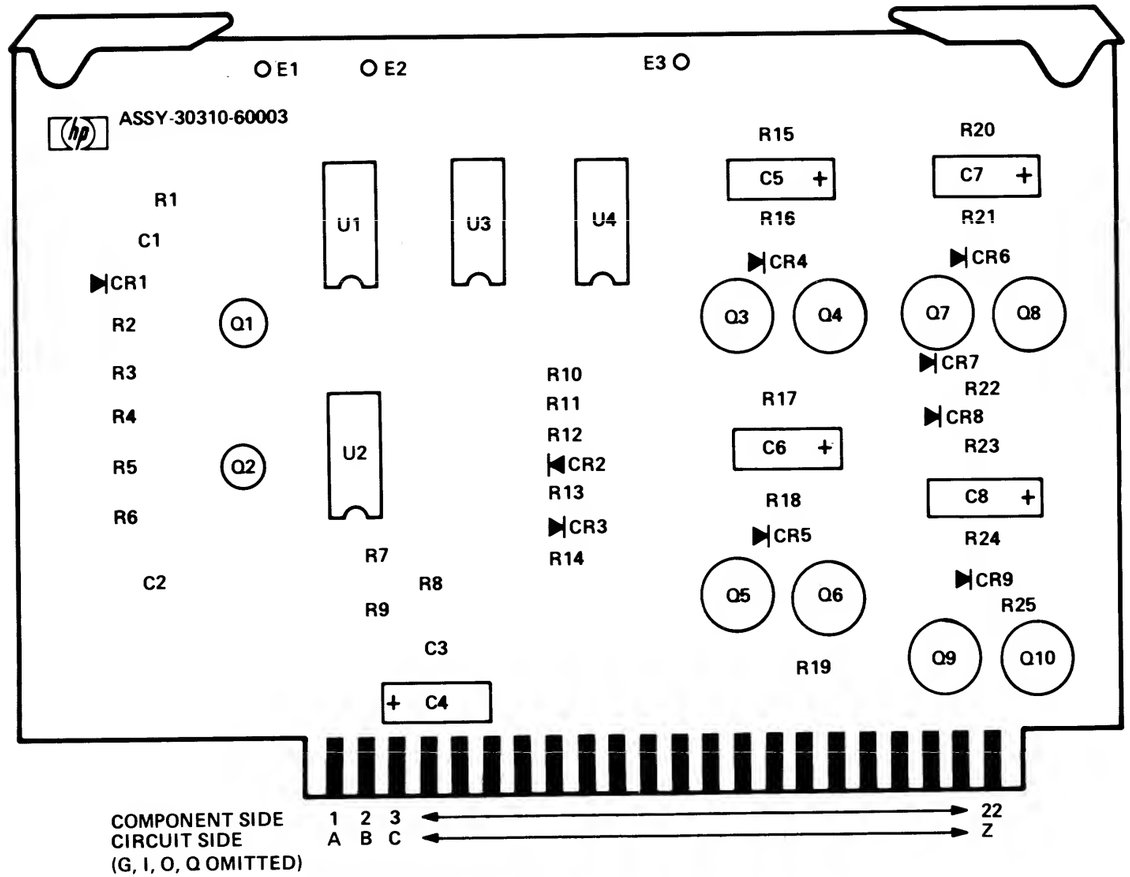

32421A ONLY A2 Inverter Driver PCA, 30310-60003, Sheet 1 of 2

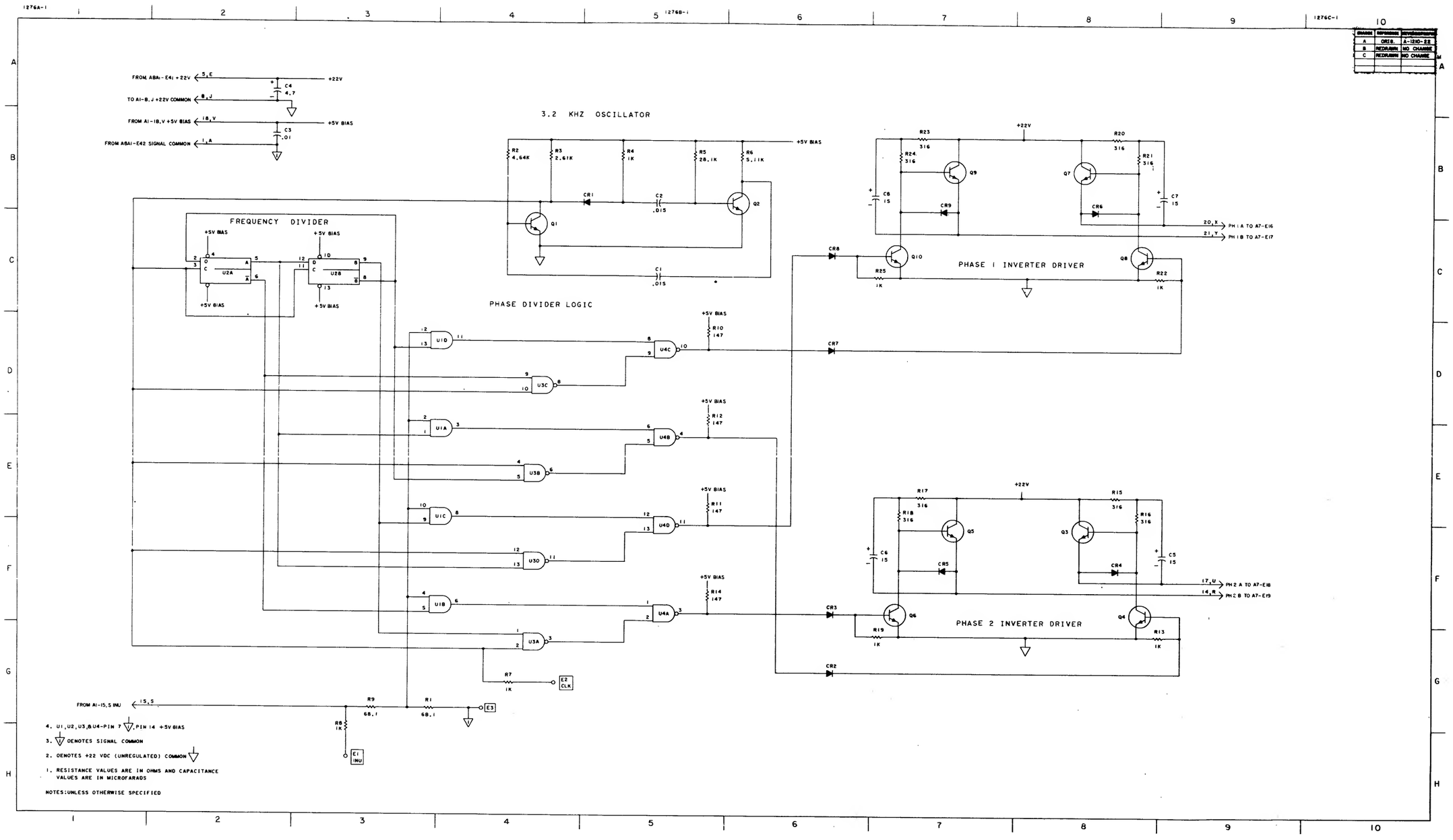

32421A ONLY A2 Inverter Driver PCA, 30310-60003, Sheet 2 of 2

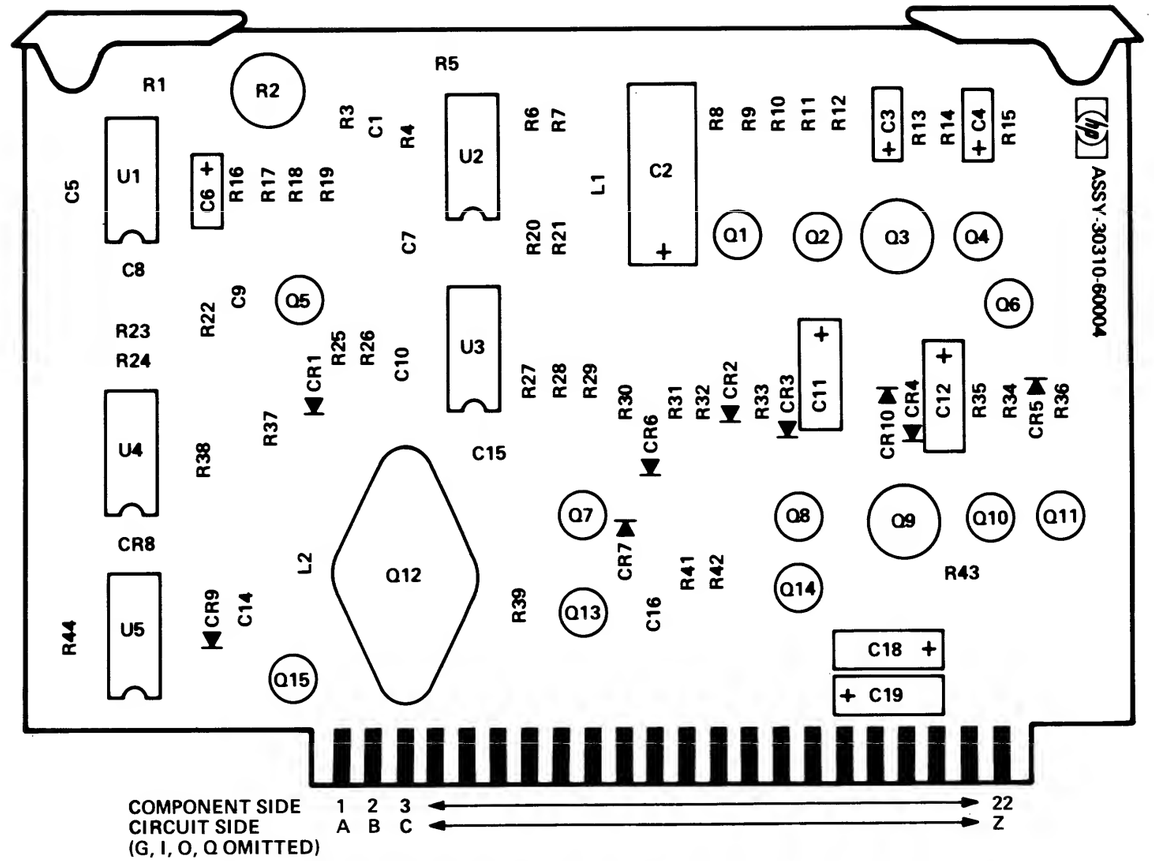

32421A ONLY A3 20 Volt Supply PCA, 30310-60004, Sheet 1 of 2

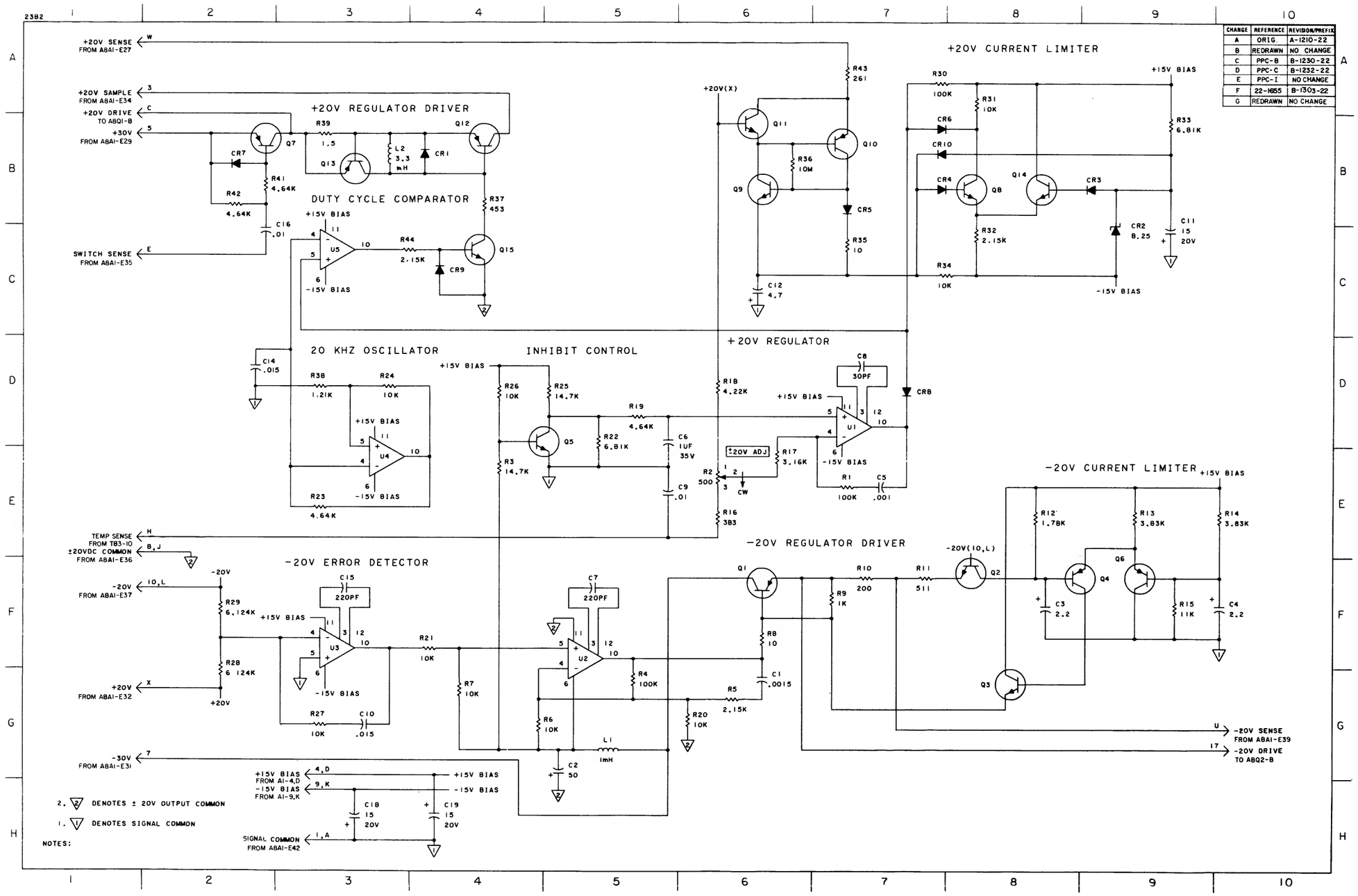

CHANGE	REFERENCE	REVISION/PREFIX
A	ORIG.	A-1210-22
B	REDRAWN	NO CHANGE
C	PPC-B	B-1230-22
D	PPC-C	B-1232-22
E	PPC-I	NO CHANGE
F	22-1655	B-1303-22
G	REDRAWN	NO CHANGE

32421A ONLY A3 20 Volt Supply PCA, 30310-60004, Sheet 2 of 2

A	AS ISSUED PCO # 22-2008	GD		01/17/79
B	R50,51,54,55 WERE INCORRECT MARKED 1K	GD		11/21/79
C	ADDED 30310-60016 ADD W SPACE			5-24-80
D	30310-60024 WAS 30310A PC 22 2779			9-3-86

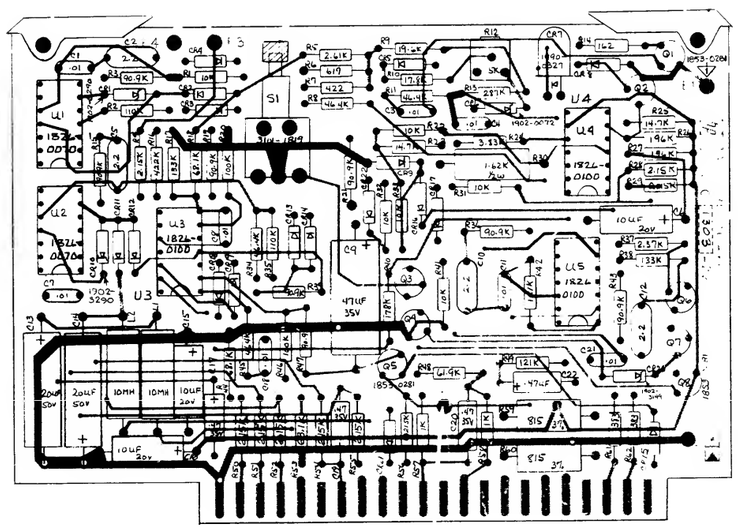

UNLESS OTHERWISE SPECIFIED:
ALL RESISTANCE IN OHMS
ALL RESISTORS ¼W 1%MF
ALL CAPACITANCE IN MICROFARADS
ALL CAPACITORS .01UF CERAMIC DISC
ALL DIODES 1901-0033
ALL TRANSISTORS 1854-0477

32421A ONLY A4 Current Limit PCA, 30310-60005, Sheet 1 of 2

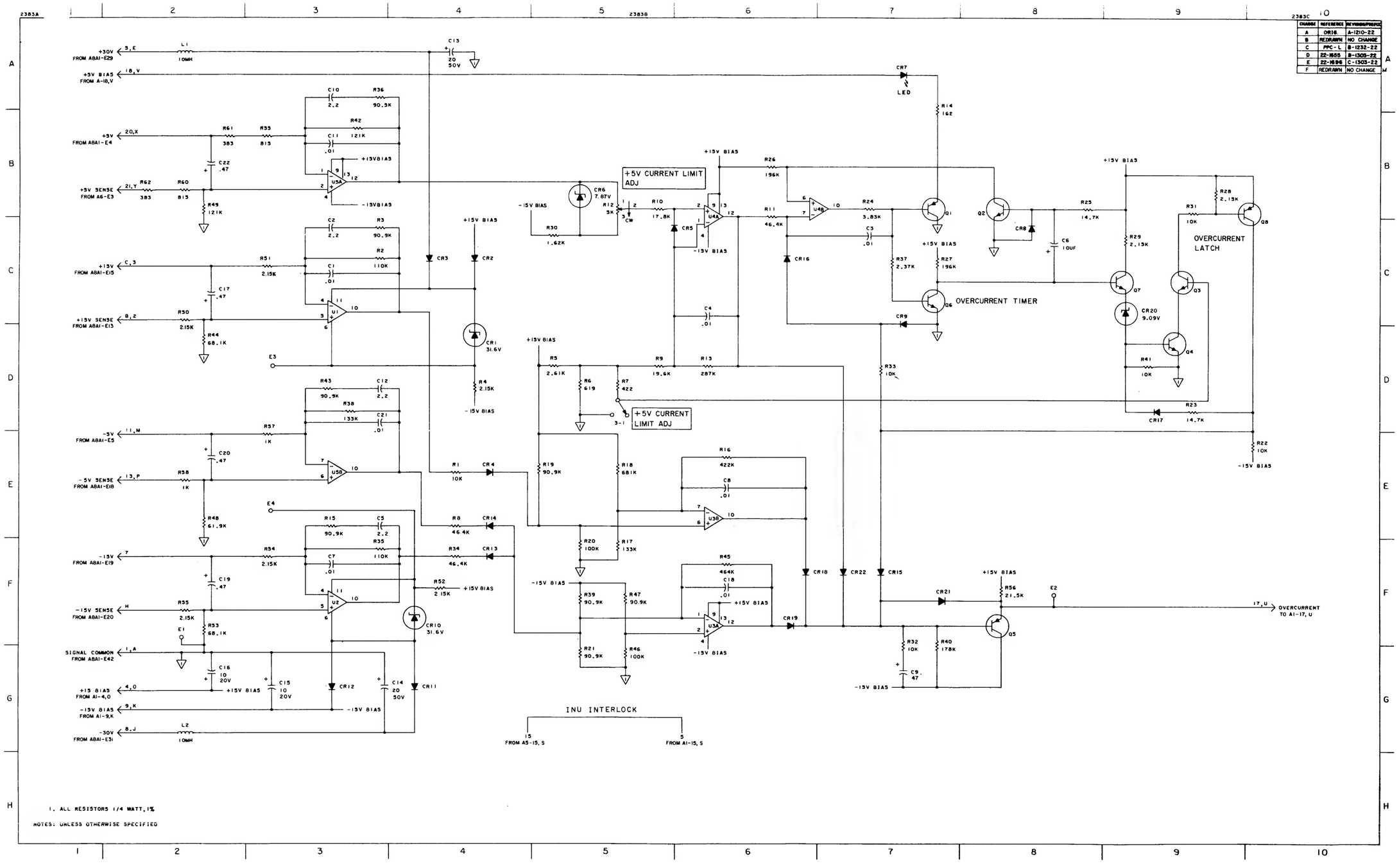

CHANGE	REFERENCE	REVISION/PREFIX
A	ORIG.	A-1210-22
B	REDRAWN	NO CHANGE
C	PPC-L	B-1232-22
D	22-1655	B-1305-22
E	22-1896	C-1303-22
F	REDRAWN	NO CHANGE

32421A ONLY A4 Current Limit PCA, 30310-60005, Sheet 2 of 2

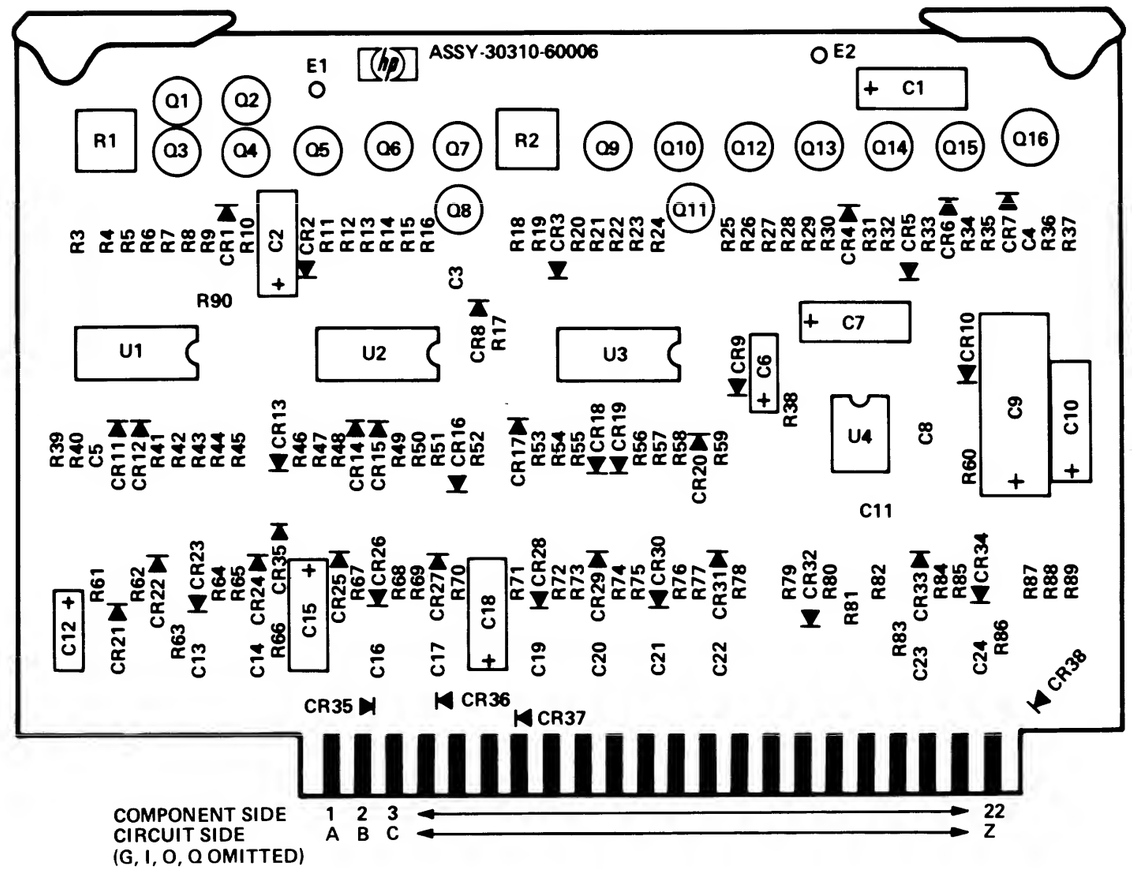

32421A ONLY A5 Voltage Protect PCA, 30310-60006, Sheet 1 of 2

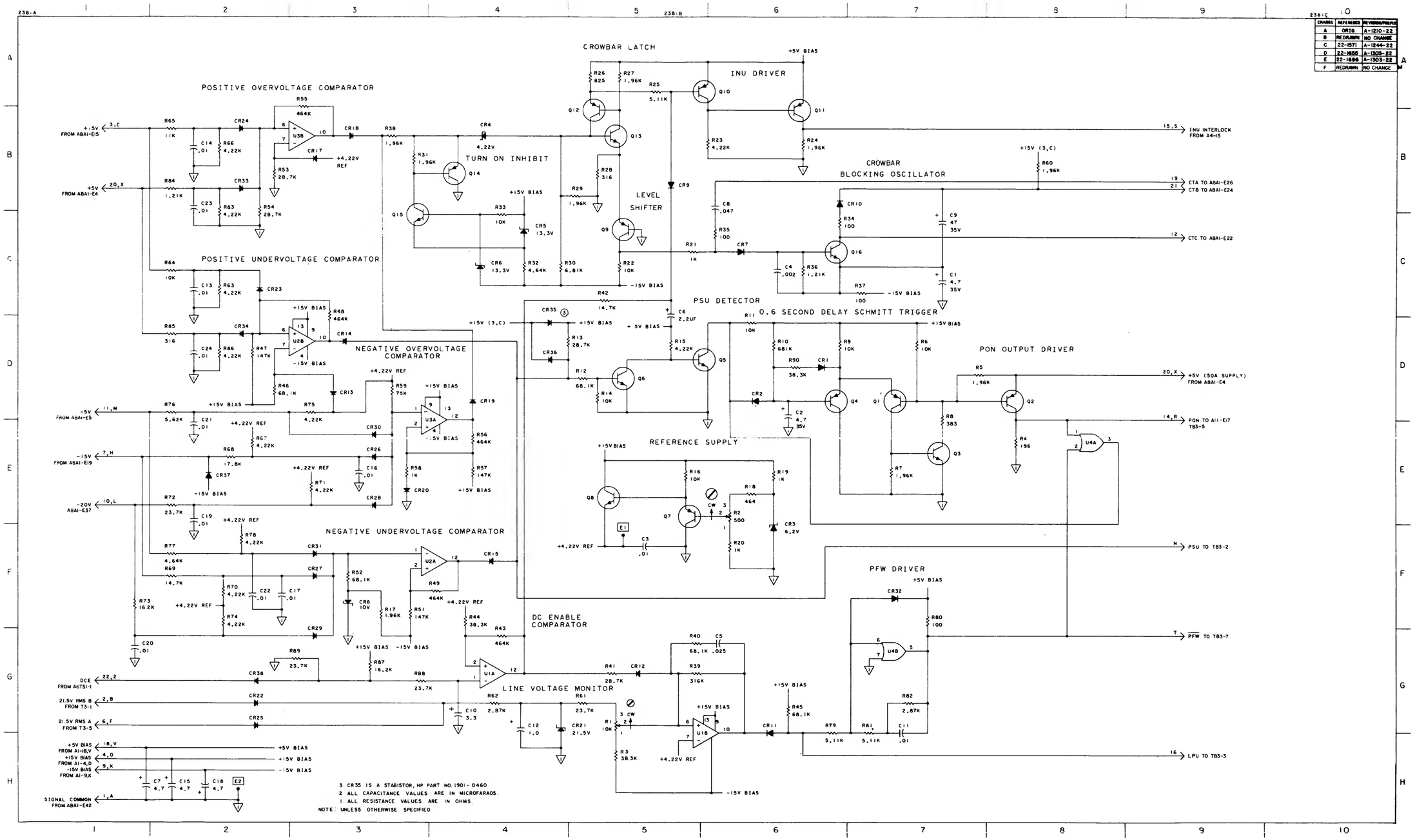

CHANGE	REFERENCE	REVISION/PREFIX
A	ORIG	A-1210-22
B	REDRAWN	NO CHANGE
C	22-1571	A-1244-22
D	22-1656	A-1303-22
E	22-1696	A-1303-22
F	REDRAWN	NO CHANGE

32421A ONLY A5 Voltage Protect PCA, 30310-60006, Sheet 2 of 2

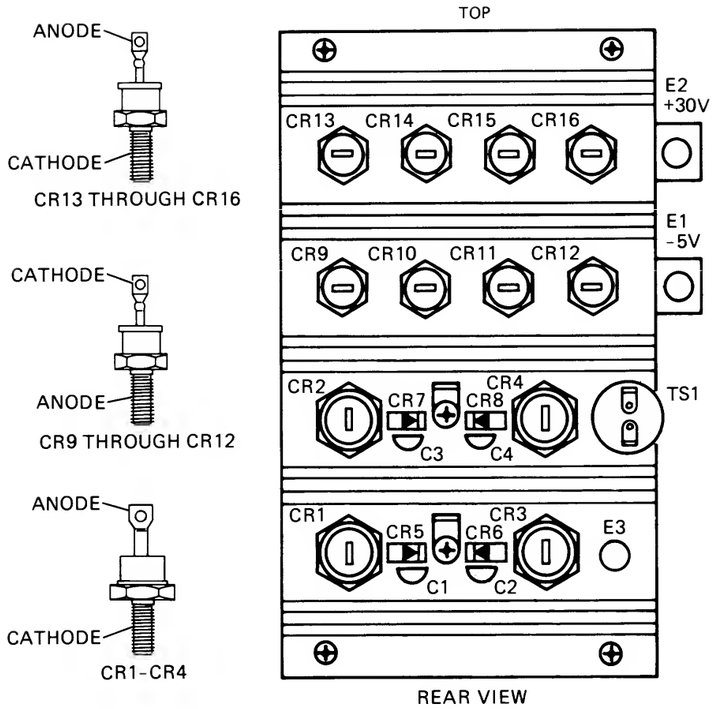

7011-26

NOTES:

1. **CAUTION.** HEAT SINK IS +5V WITH RESPECT TO POWER SUPPLY CHASSIS.
2. WHEN INSTALLING DIODES IN THIS ASSEMBLY, USE THERMAL COMPOUND (HP STOCK NO. 6040-0239) ON BOTH SIDES OF INSULATING WASHERS OR ON METAL WASHER AND DIODE MOUNTING SURFACE.
3. TIGHTEN MOUNTING NUTS FOR CR1 THROUGH CR4 TO 30 IN.-LBS (0.35 kg-m).
4. TIGHTEN MOUNTING NUTS FOR CR9 THROUGH CR16 TO 15 IN.-LBS (0.17 kg-m).
5. REFERENCE DESIGNATION PREFIX IS A6.

1304-1

CHANGE	REFERENCE	REVISION/PREFIX
A	ORIG	A-1210-22
B	REDRAWN	NO CHANGE

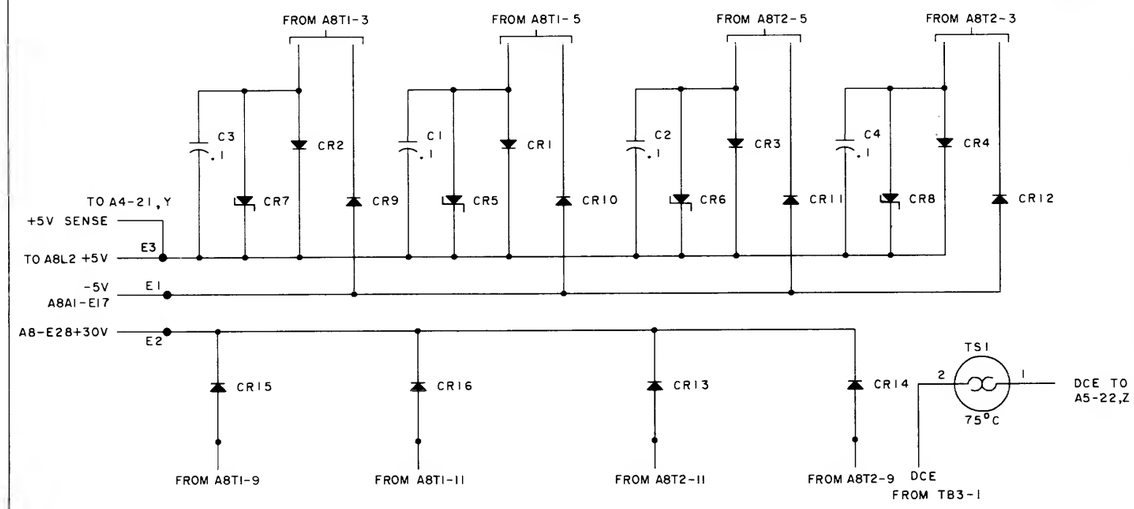

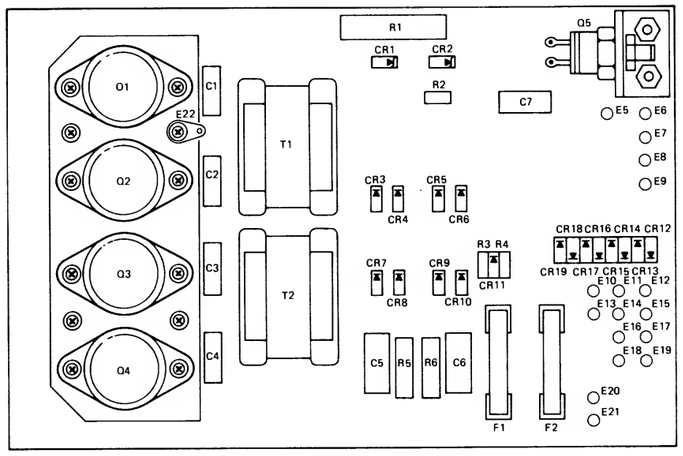

TOP VIEW

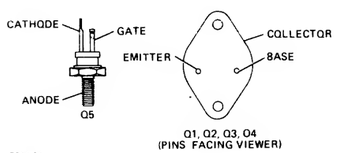

7011-31

NOTES:

1. WHEN INSTALLING Q1, Q2, Q3, OR Q4, USE THERMAL COMPOUND (HP STOCK NO. 6040-0239) BETWEEN TRANSISTOR AND HEAT SINK.
2. WHEN INSTALLING Q5, TIGHTEN MOUNTING NUT TO 15 IN.-LBS (0.17 kg·m).
3. REFERENCE DESIGNATION PREFIX IS A7.

1302-1

CHANGE	REFERENCE	REVISION/PREFIX
A	ORIG	A-1210-22
B	REDRAWN	NO CHANGE
C	22-1614	B-1210-22
D	REDRAWN	NO CHANGE

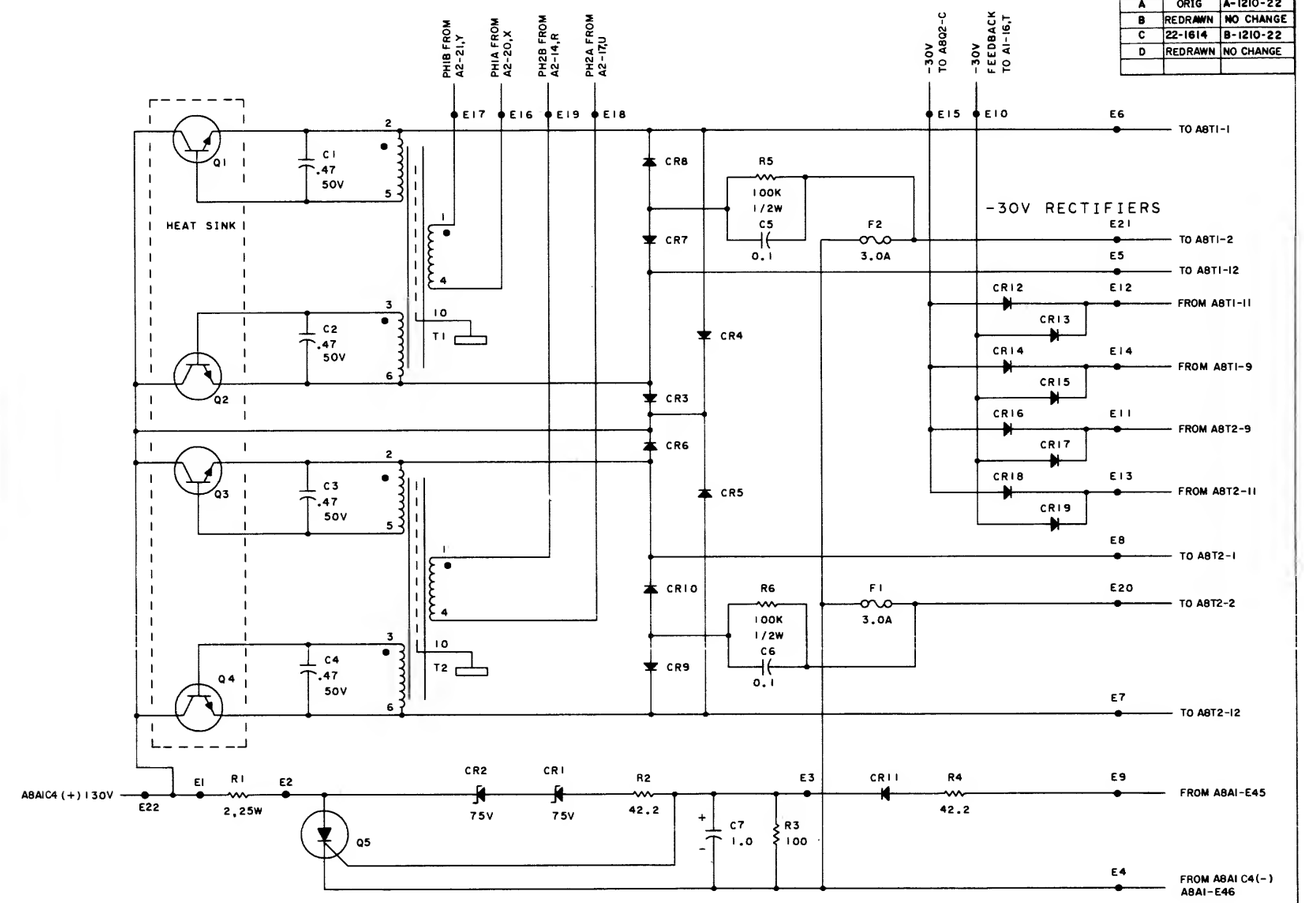

1. RESISTANCE VALUES ARE IN OHMS ±1%, ¼ W.

NOTE: UNLESS OTHERWISE SPECIFIED

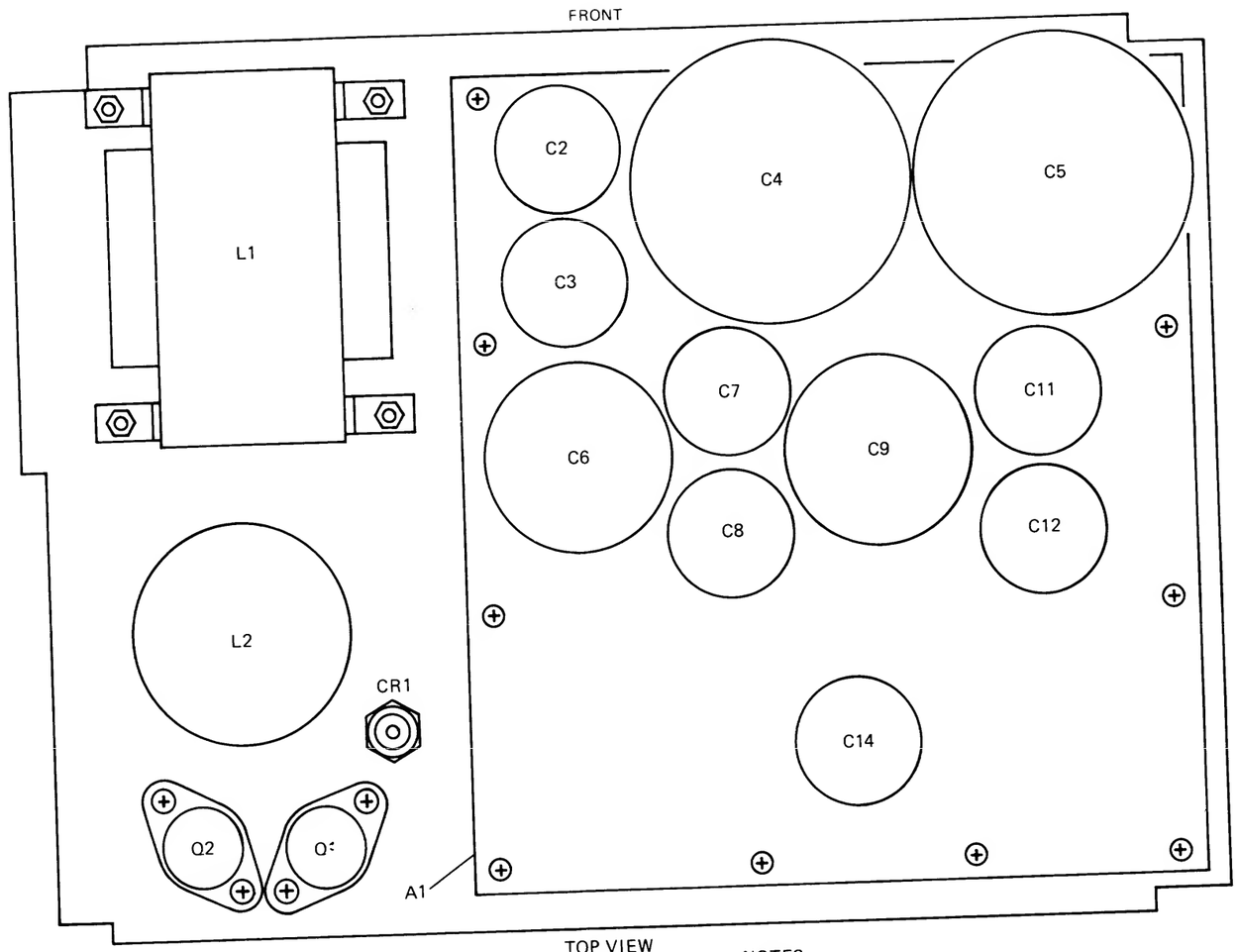

7011-33

NOTES:

1. FOR CLARITY T1 AND T2, SITUATED ABOVE L1, ARE NOT SHOWN.
2. WHEN INSTALLING Q1 OR Q2 IN THE TRANSISTOR SOCKET, USE THERMAL COMPOUND (HP STOCK NO. 6040-0239) ON BOTH SIDES OF INSULATING WASHER.
3. TIGHTEN MOUNTING NUT FOR CR1 TO 15 IN.-LBS (0.17 kg-m).
4. COMPONENTS MAY VARY SLIGHTLY FROM LOCATIONS SHOWN.
5. REFERENCE DESIGNATION PREFIX IS A8.

32421A ONLY A8 Deck Assembly (Top View), 30310-60014, Sheet 1 of 3

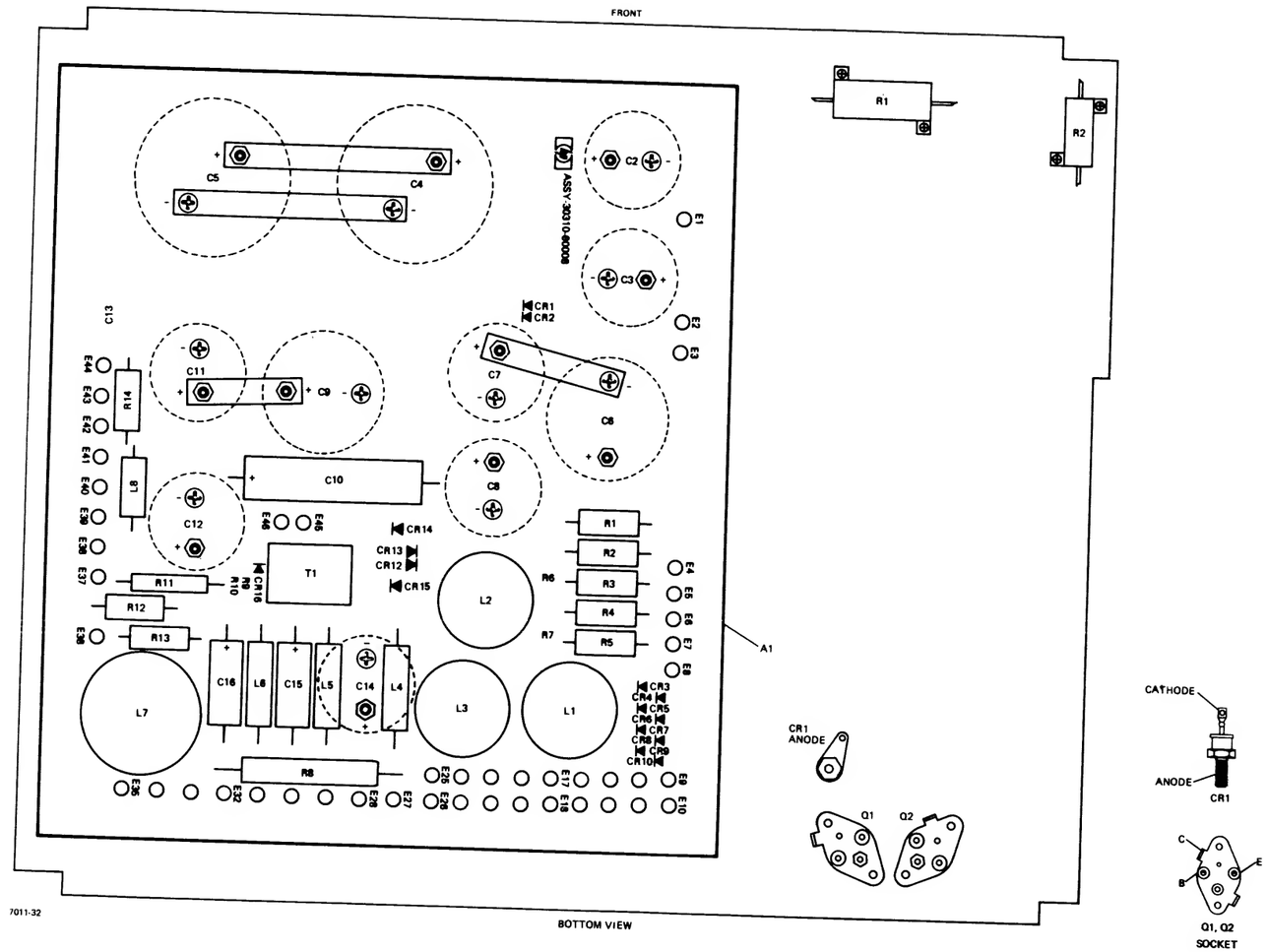

32421A ONLY A8 Deck Assembly (Top View), 30310-60014, Sheet 2 of 3

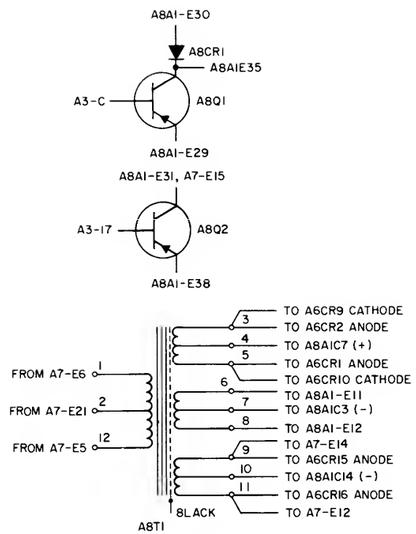

NO-LOAD VOLTAGES AND WINDING DC RESISTANCES, A8T1 AND A8T2

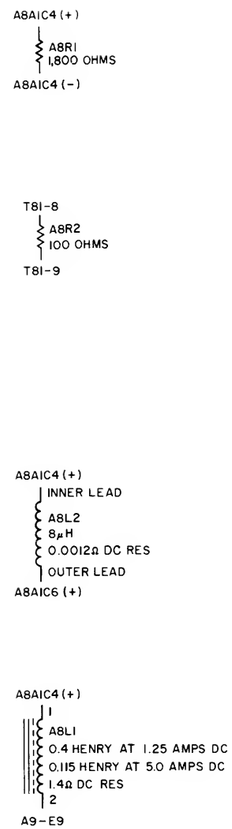

NOTE:
ON LOW-RESISTANCE RANGES SOME OHMMETERS APPLY AC TO THE COMPONENT BEING MEASURED. THEREFORE AN ACCURATE READING WILL NOT BE FURNISHED FOR INDUCTIVE COMPONENTS.

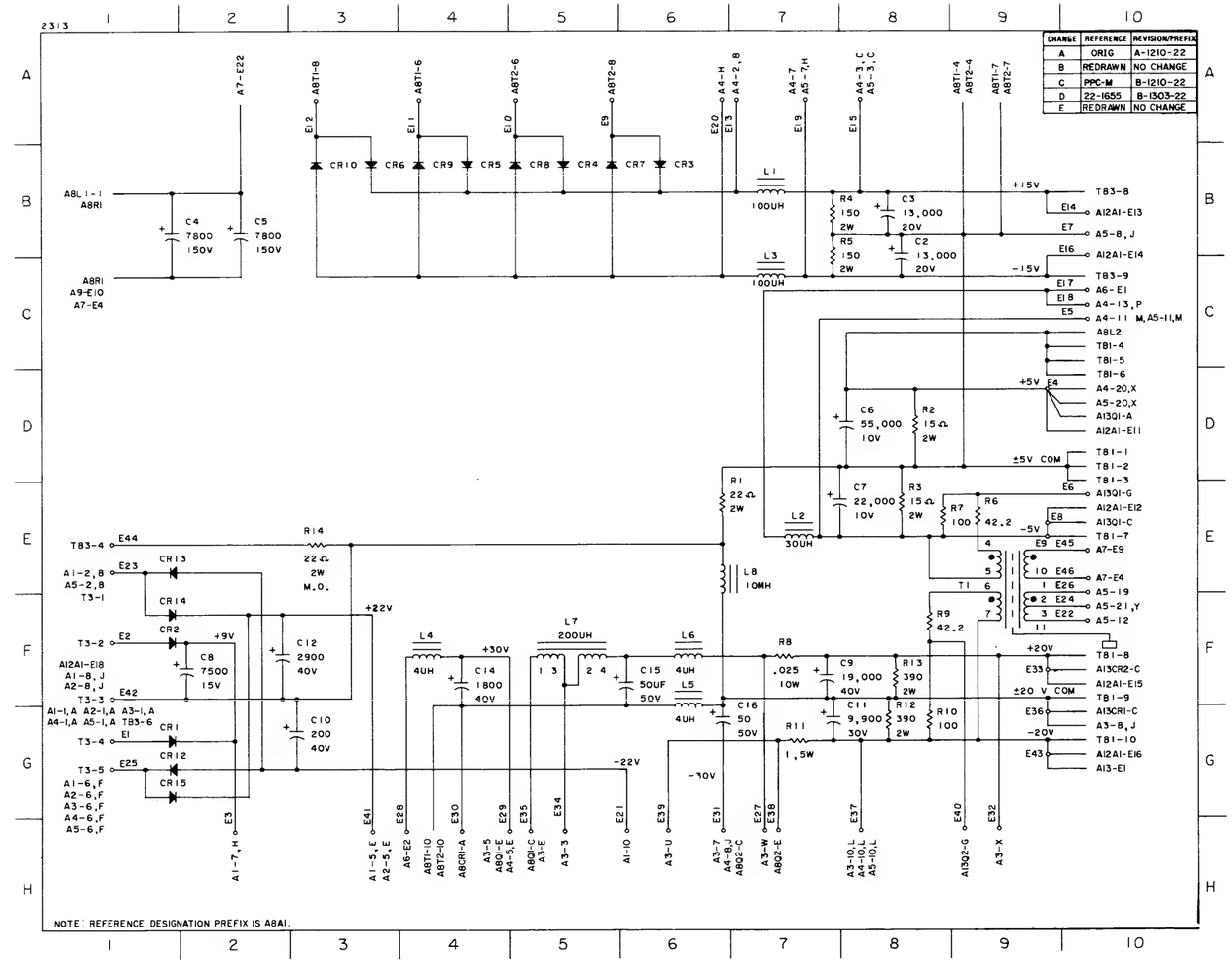

CHANGE	REFERENCE	REVISION/PREFIX
A	ORIG	A-1210-22
B	REDRAWN	NO CHANGE
C	PPC-M	B-1210-22
D	22-1655	B-1303-22
E	REDRAWN	NO CHANGE

32421A ONLY A8 Deck Assembly (Top View), 30310-60014, Sheet 3 of 3

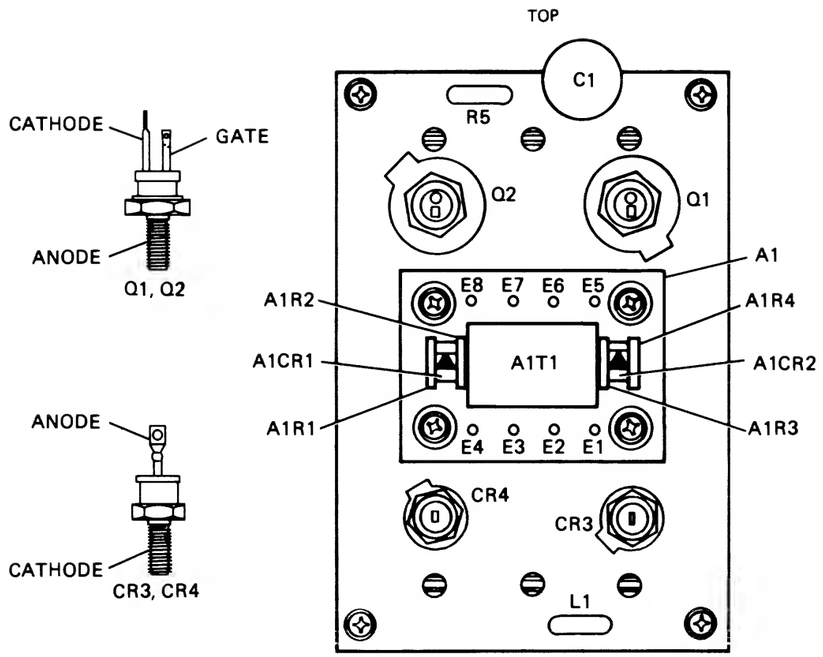

FRONT VIEW

NOTES:

1. WHEN INSTALLING SEMICONDUCTOR DEVICES IN THIS ASSEMBLY, USE THERMAL COMPOUND (HP STOCK NO. 6040-0239) ON BOTH SIDES OF INSULATING WASHERS.
2. TIGHTEN ALL SEMICONDUCTOR MOUNTING NUTS TO 15 IN.-LBS (0.17 kg-m).
3. WHEN INSTALLING PLASTIC SCREWS USE THREAD SEALANT (HP STOCK NO. 0470-0013). DO NOT TIGHTEN EXCESSIVELY.
4. REFERENCE DESIGNATION PREFIX IS A9.

7011-30

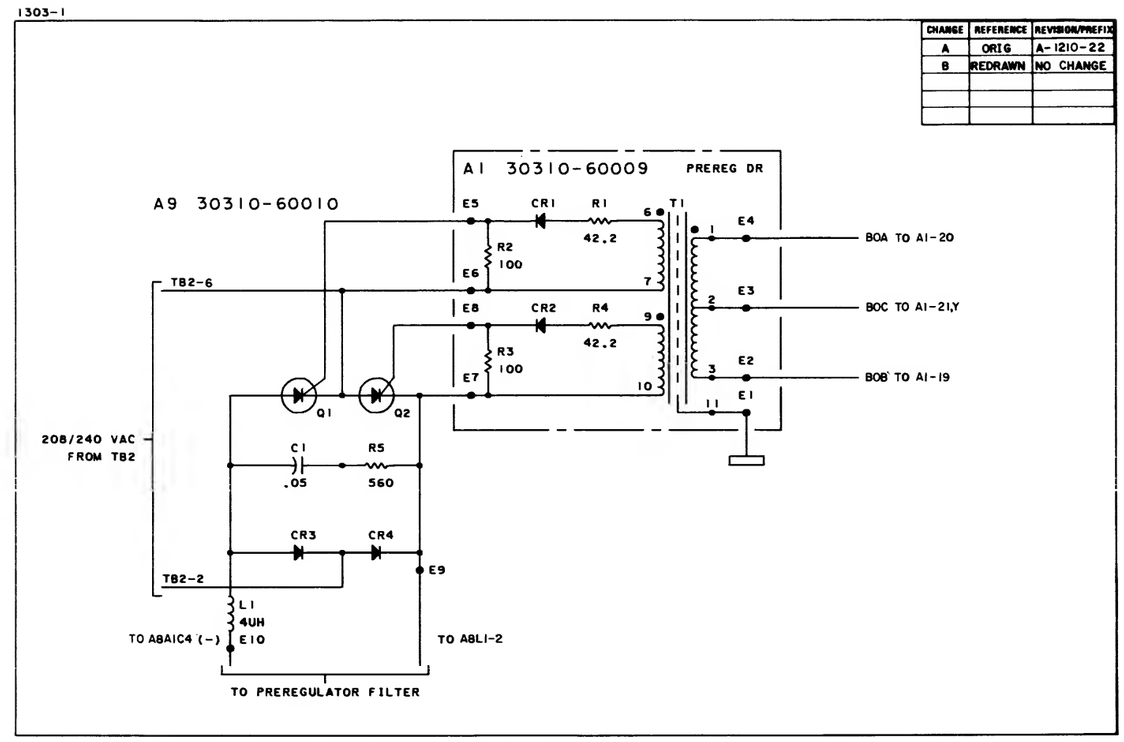

32421A ONLY A9 Preregulator Assembly, 30310-60010, Sheet 1 of 1

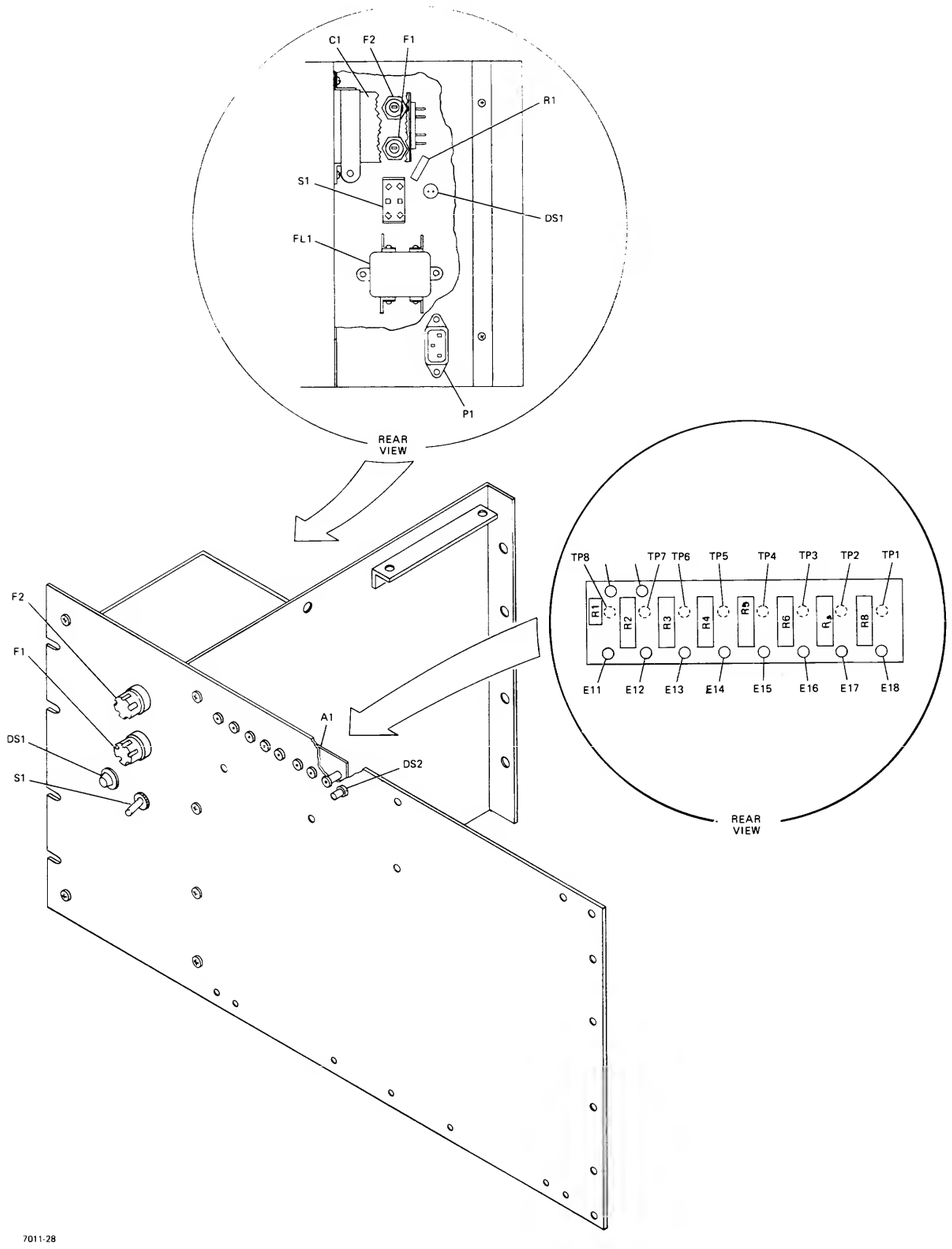

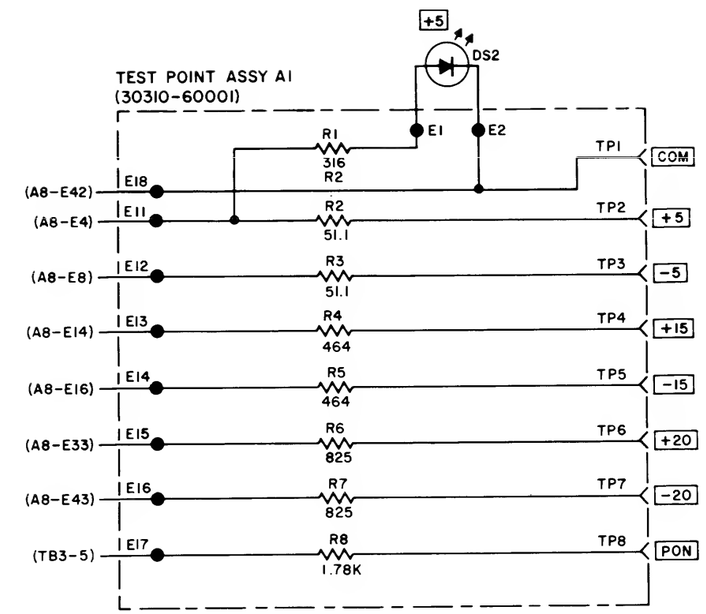

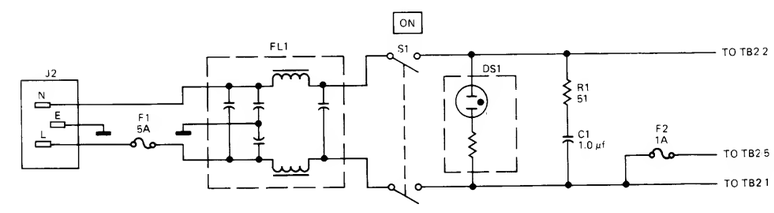

NOTES:
1. RESISTANCE VALUES ARE IN OHMS.
2. REFERENCE DESIGNATION PREFIX IS A12.

32421A ONLY A12 Front Panel Assembly, 30310-60013, Sheet 1 of 1

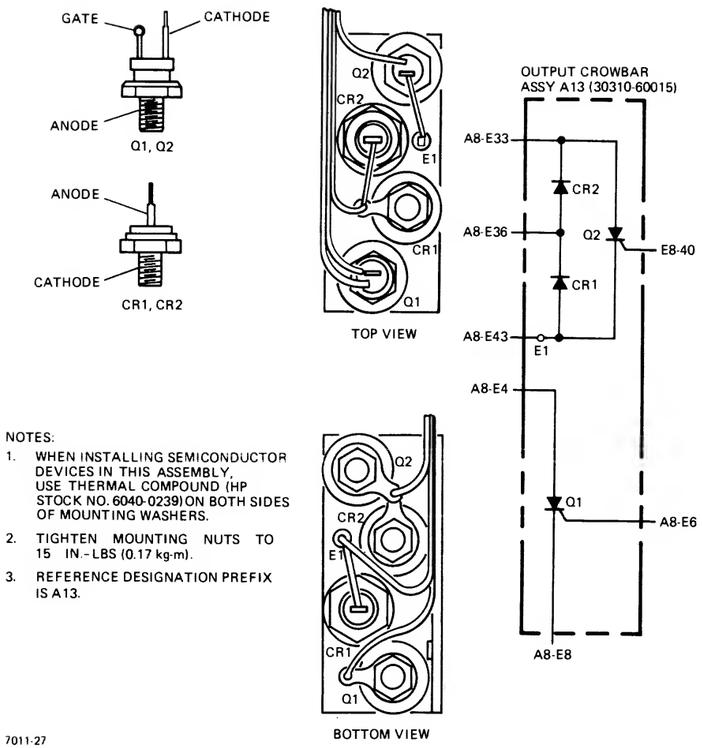

NOTES:

1. WHEN INSTALLING SEMICONDUCTOR DEVICES IN THIS ASSEMBLY, USE THERMAL COMPOUND (HP STOCK NO. 6040-0239) ON BOTH SIDES OF MOUNTING WASHERS.
2. TIGHTEN MOUNTING NUTS TO 15 IN.-LBS (0.17 kg-m).
3. REFERENCE DESIGNATION PREFIX IS A13.

7011-27

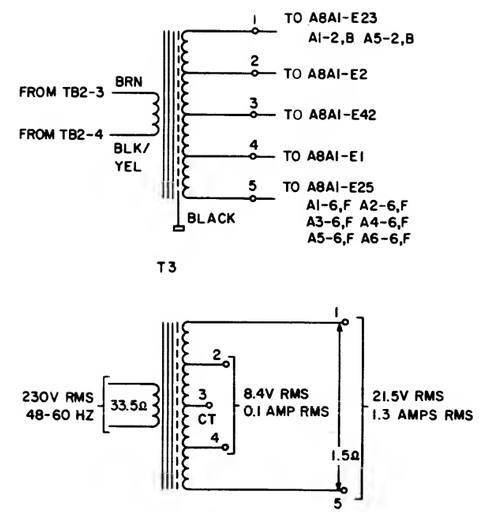

NO-LOAD VOLTAGES AND WINDING DC RESISTANCES, T3

NOTE:
ON LOW-RESISTANCE RANGES SOME OHMMETERS APPLY AC TO THE COMPONENT BEING MEASURED. THEREFORE AN ACCURATE READING WILL NOT BE FURNISHED FOR INDUCTIVE COMPONENTS.

FAN B1, CHOKE L1, TRANSFORMER T3

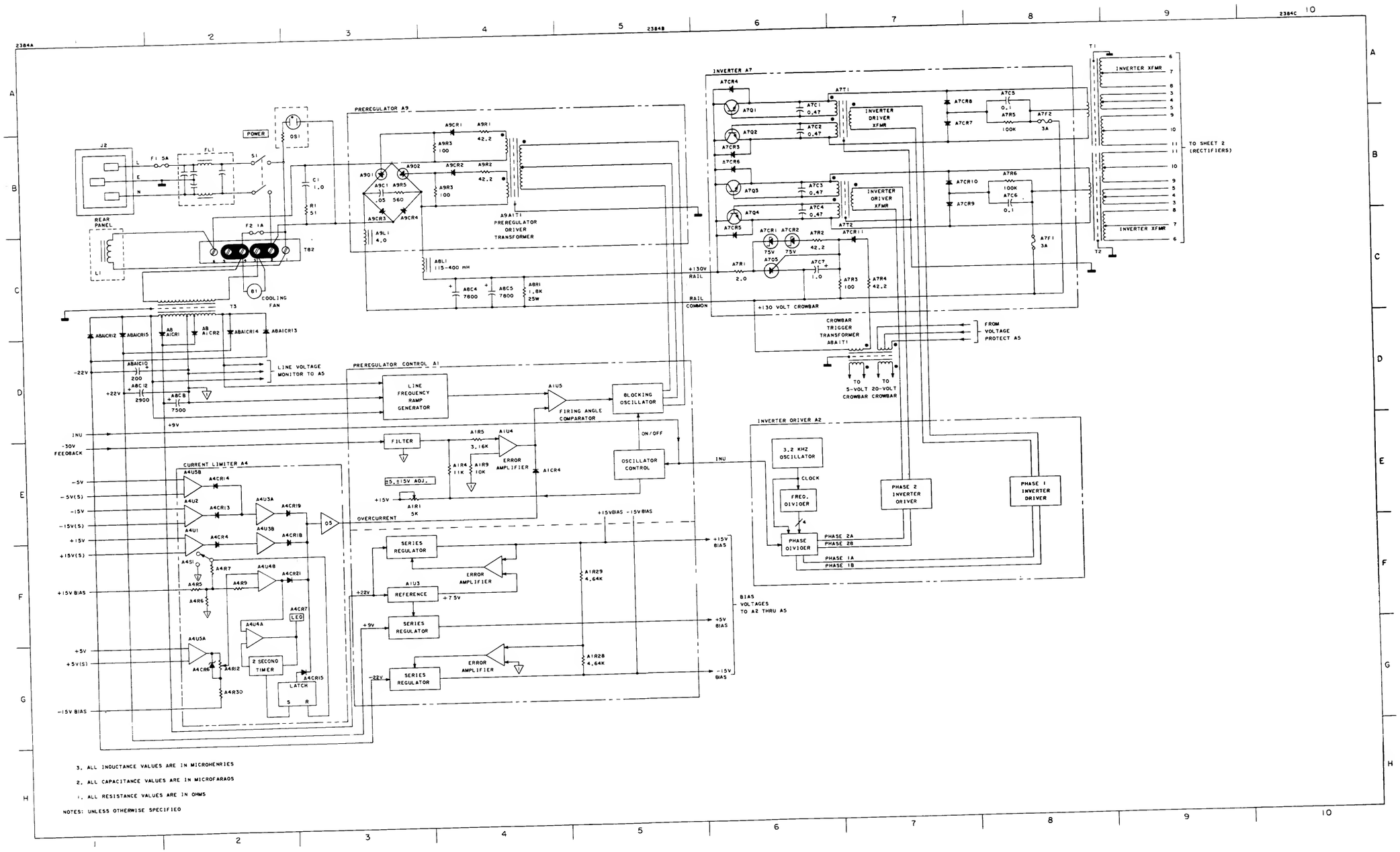

32421A ONLY Power Supply, HP 30310A, Sheet 1 of 2

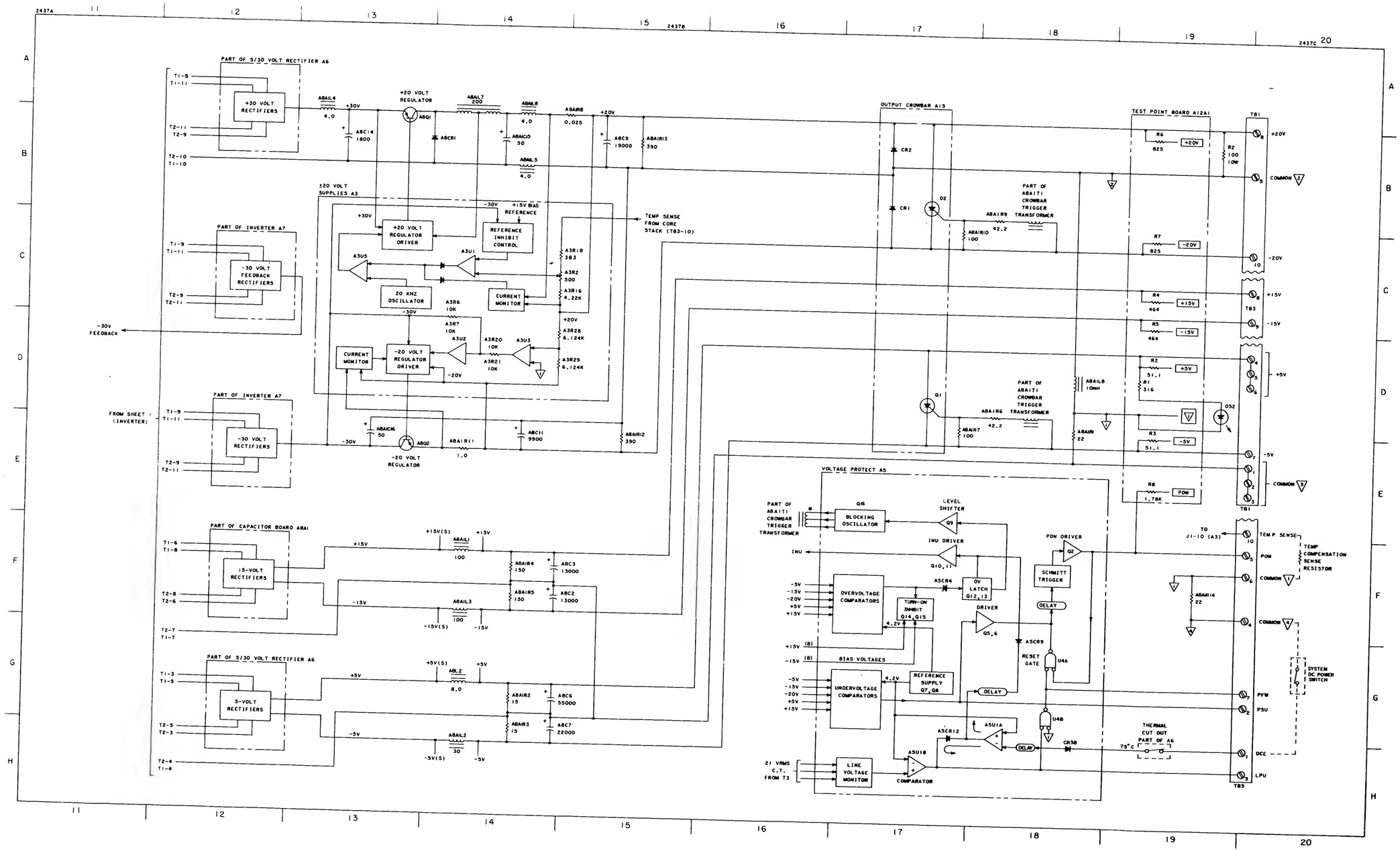

32421A ONLY Power Supply, HP 30310A, Sheet 2 of 2

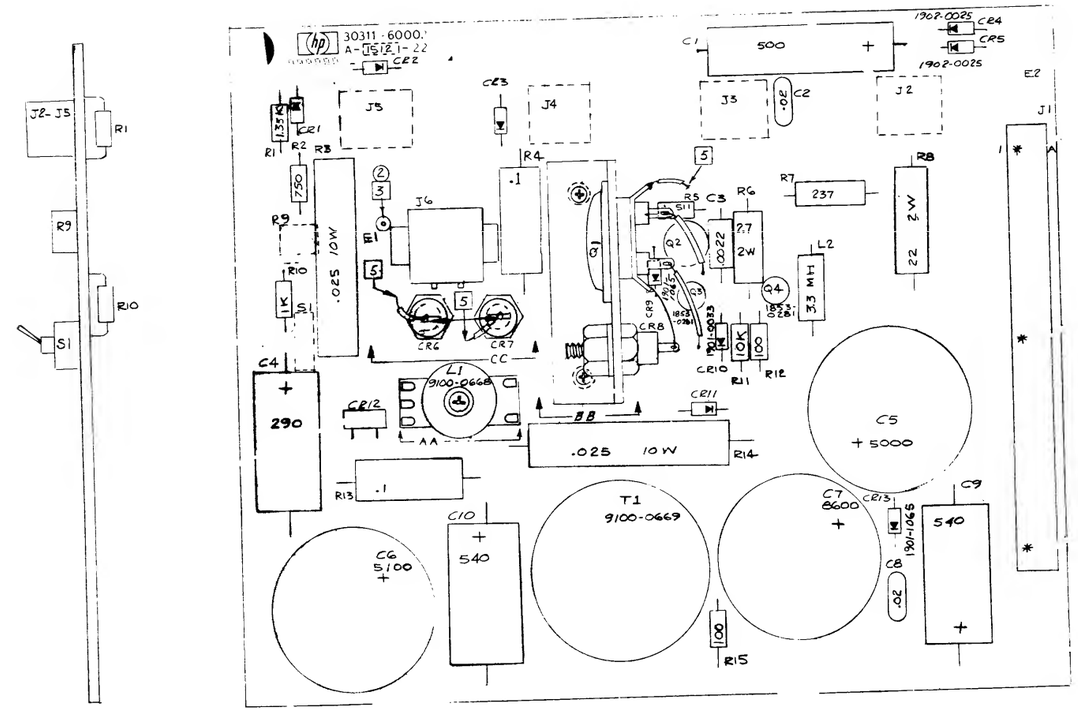

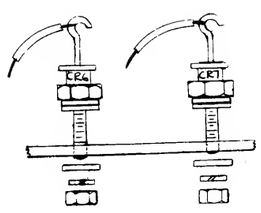

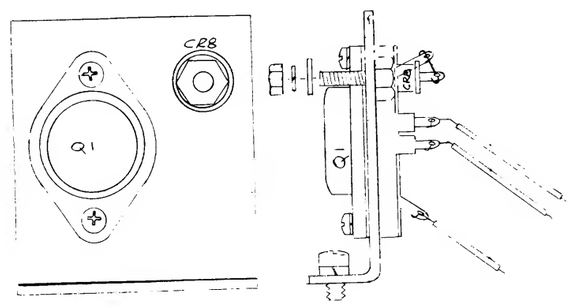

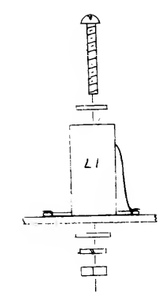

32421A ONLY Mother Board Assembly, 30311-60002, Sheet 1 of 2

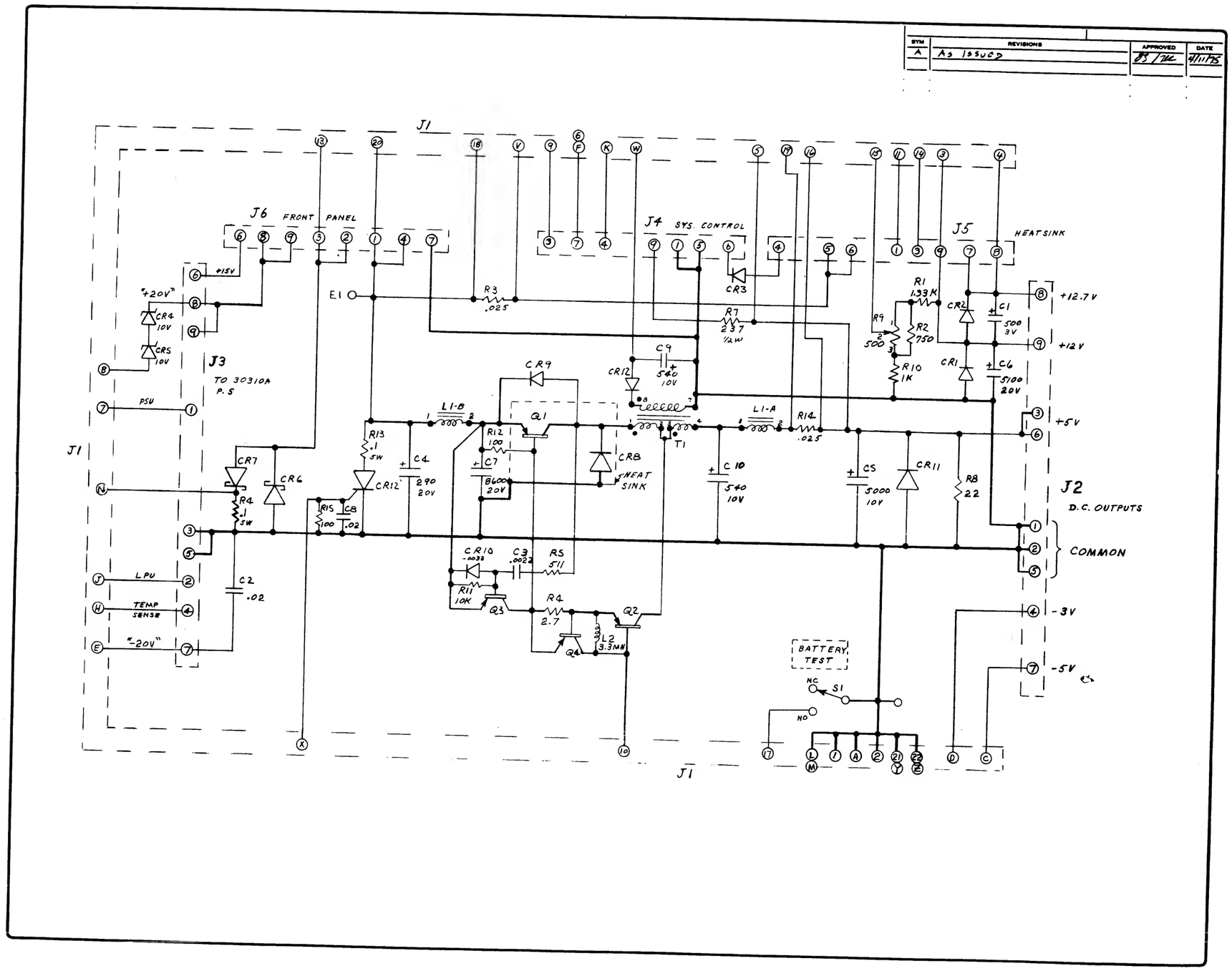

32421A ONLY HP 30311A Power Supply, Mother Board Assembly, 30311-60002, Sheet 2 of 2

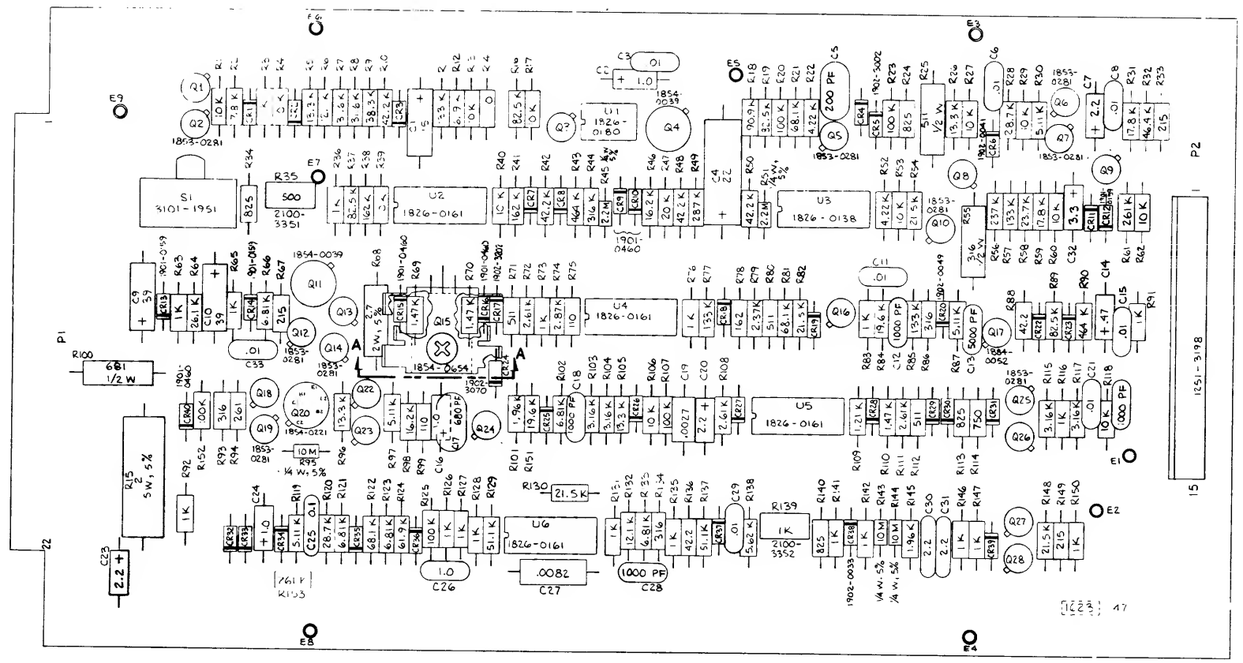

NOTES :

1. UNLESS OTHERWISE SPECIFIED :
   ALL RESISTORS ARE IN OHMS ±1%, 1/8 W
   ALL CAPACITORS ARE IN MICROFARADS
   ALL TRANSISTORS ARE 1854-0477
   ALL DIODES ARE 1901-0033

32421A ONLY Control Board Assembly, 30311-60003, Sheet 1 of 2

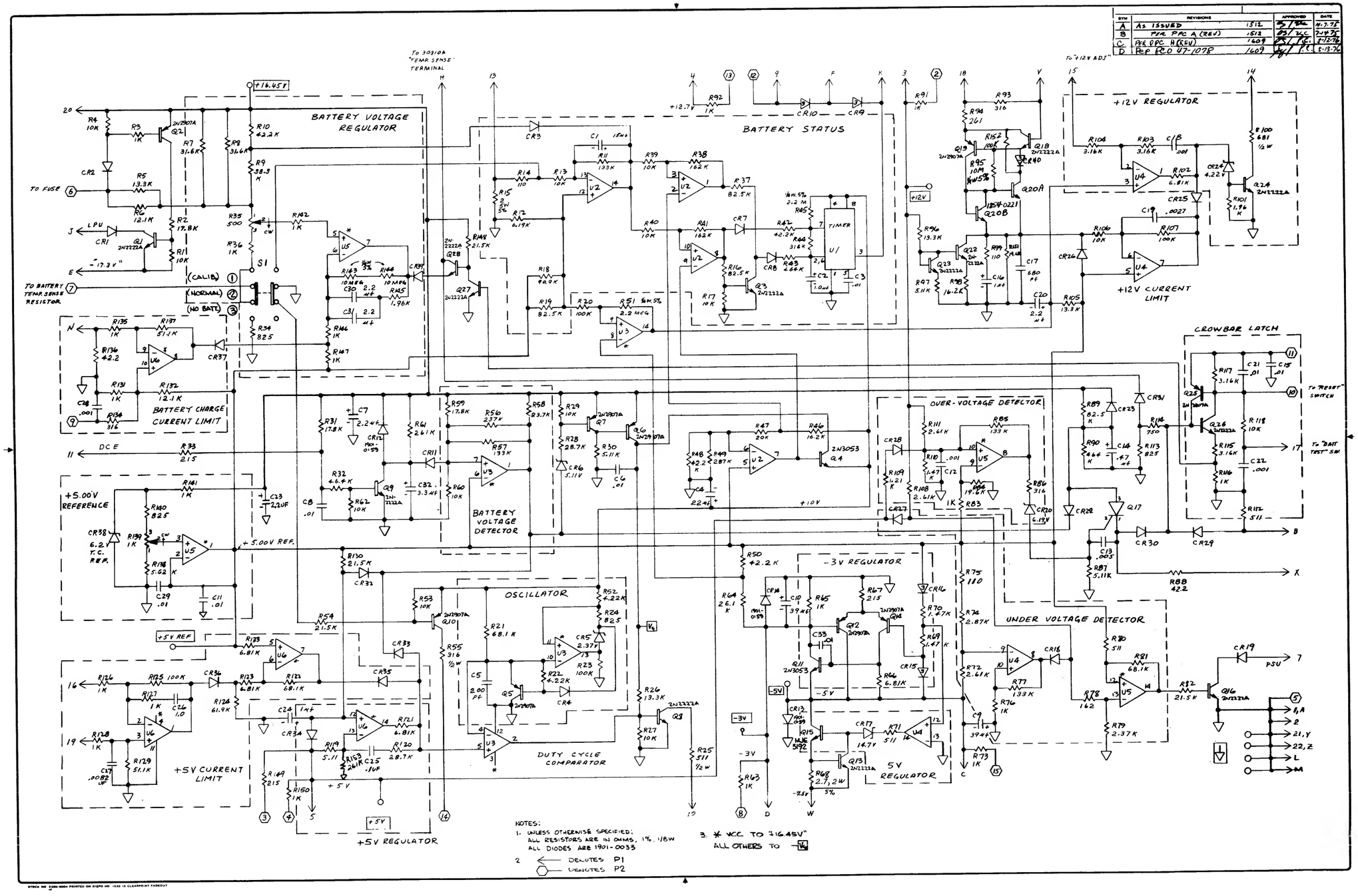

SYM	REVISIONS		APPROVED	DATE
A	AS ISSUED	1512		11-7-75
B	PER PRO A (REV)	1513		7-14-76
C	PER DPC H (REV)	1609		8-13-76
D	PER PCO 47-1078	1609		8-13-76

32421A ONLY Control Board Assembly, 30311-60003, Sheet 2 of 2

A | AS ISSUED

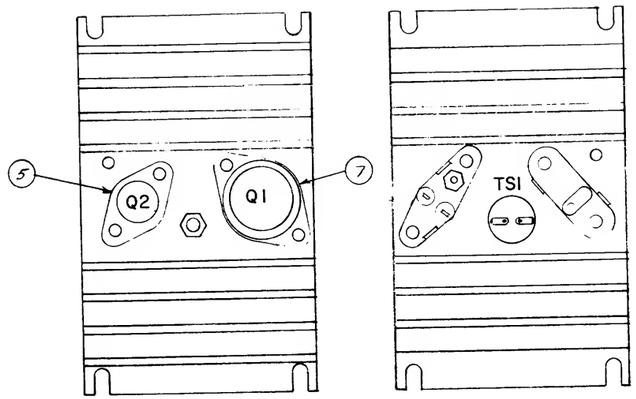

TOP VIEW BOTTOM VIEW

Q1 1853-0310
Q2 1853-0052
TSI 3103-0015

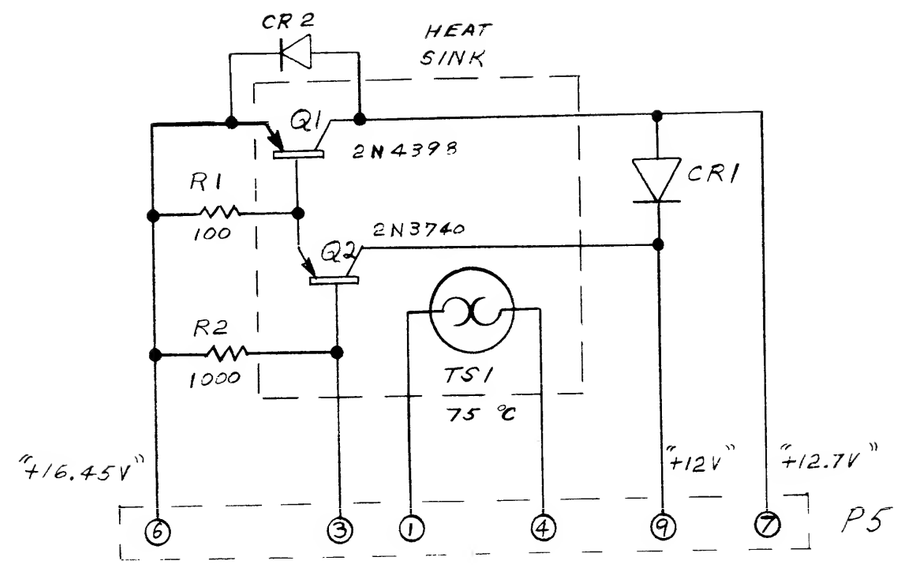

32421A ONLY Heat Sink Assembly, 30311-60005, Sheet 1 of 1

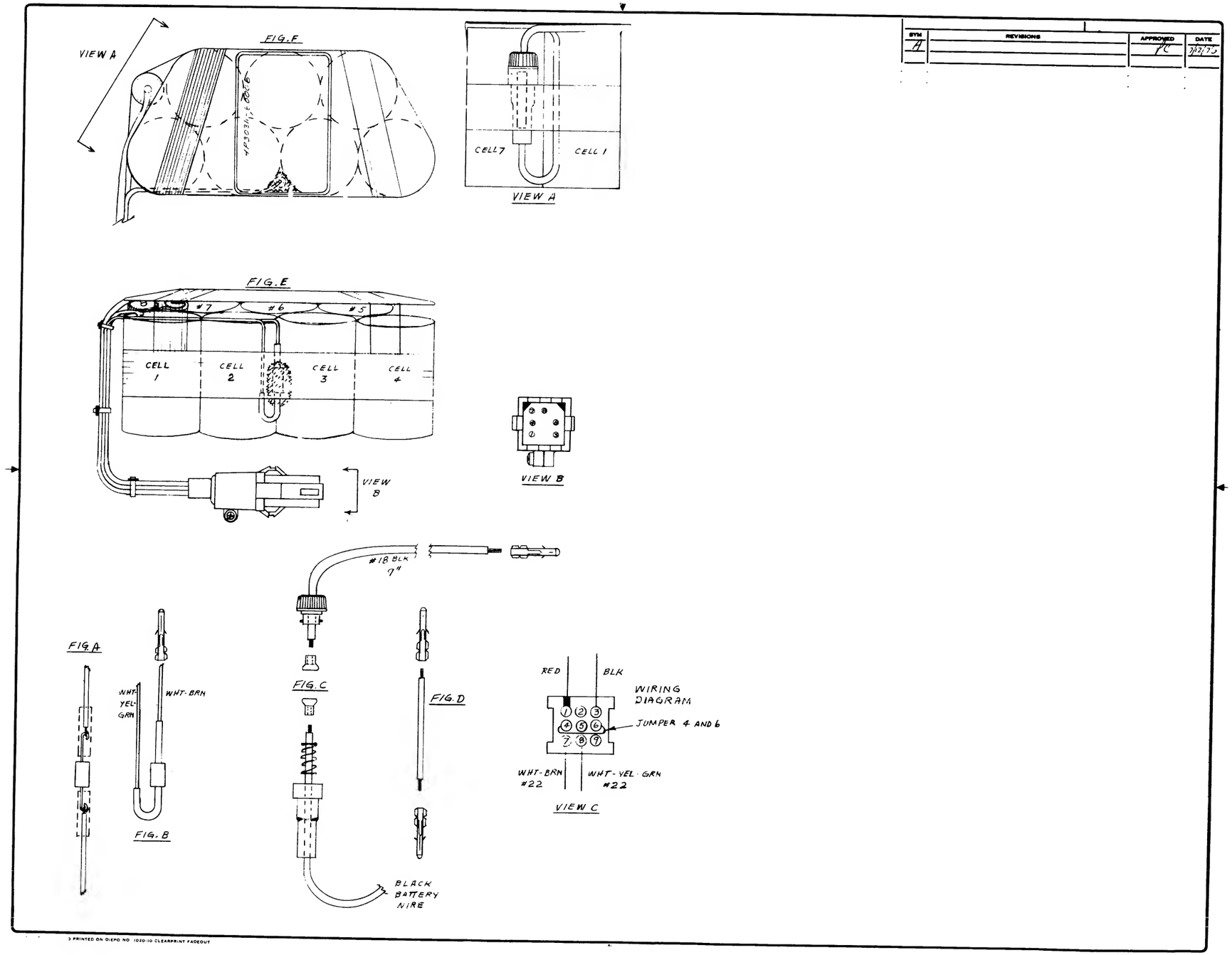

32421A ONLY Battery Pack Assembly, 30311-60006, Sheet 1 of 1

ENGINEERING RESPONSIBILITY	SEPIA
0 1 2 3 4 5 6 7 8 9 10 11 12 13 14 15	
16 17 18 19 20 21 22 23 24 25 26 27 28	
29 30 31 32 33	

SYM	REVISIONS	APPROVED	DATE
A	AS ISSUED	LE	7-7-
B	REL PER DCC 0-HG		8/18/76
C	Deleted Item 19, ITEM'R QTY WAS 1		9-15-76

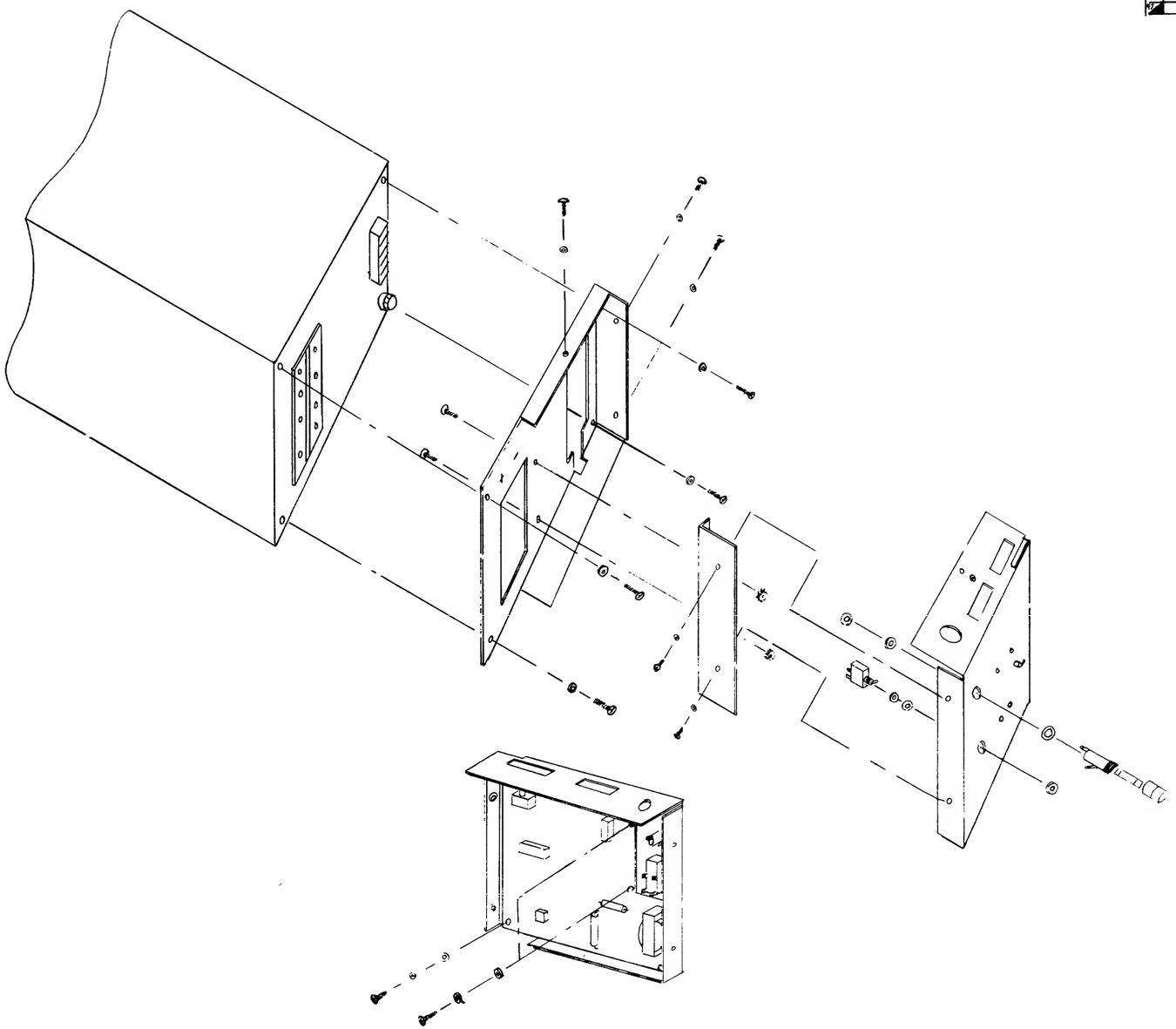

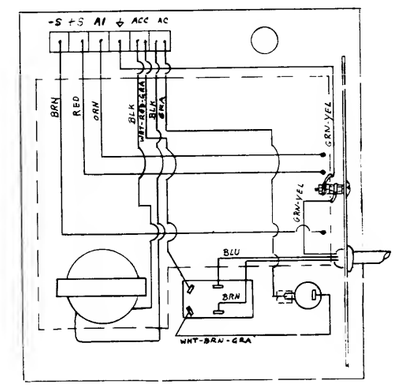

32421A ONLY HP 30312A Power Supply Assembly, 30312-60001, Sheet 1 of 1

A AS ISSUED

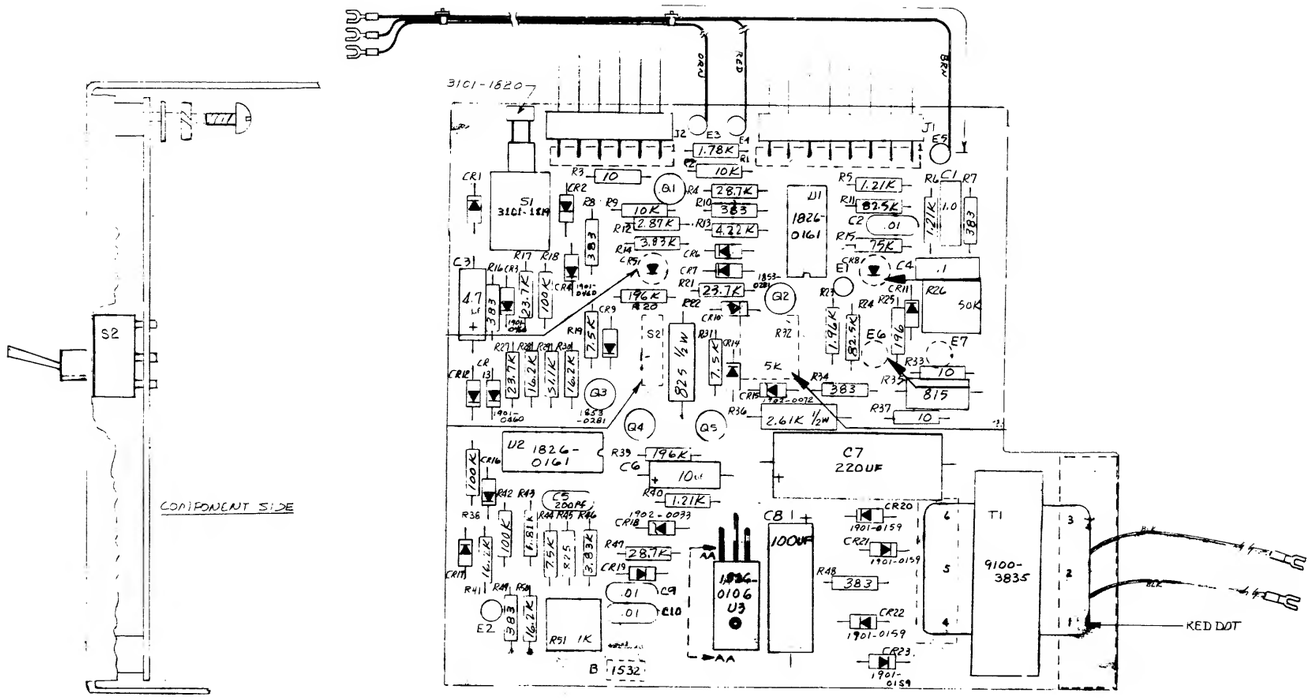

NOTES:

1. UNLESS OTHERWISE SPECIFIED:
   ALL RESISTANCE IN OHMS
   ALL RESISTORS 1/8W, 1%
   ALL CAPACITANCE IN MICROFARADS
   ALL TRANSISTORS - 1854-0477
   ALL DIODES — 1901-0050

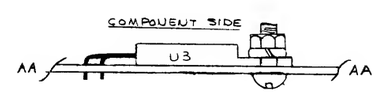

32421A ONLY Interface Board Assembly, 30312-60002, Sheet 1 of 2

SYM	REVISIONS	APPROVED	DATE
A	AS ISSUED 1532	DS/P.C.	5/4/76

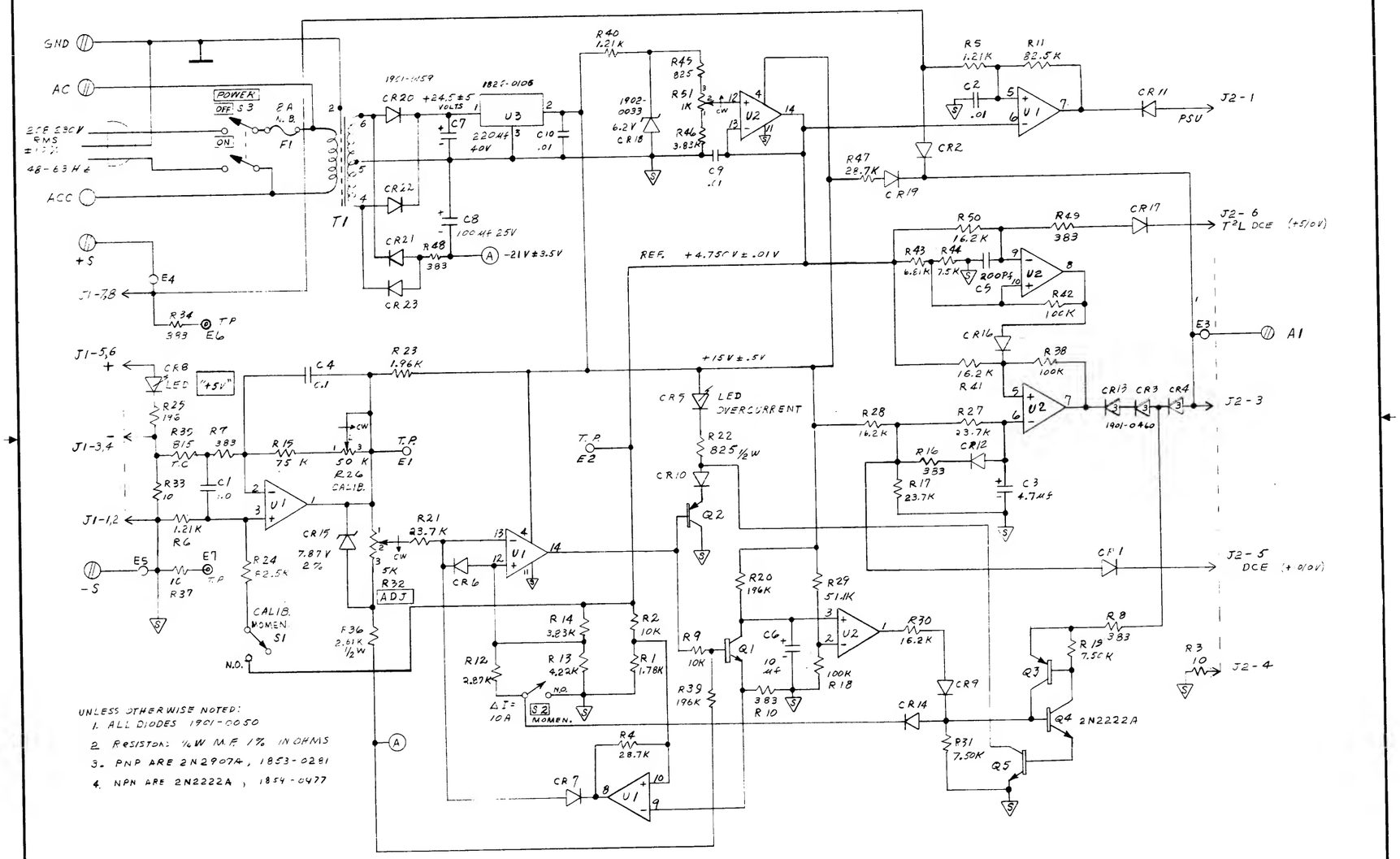

STOCK NO. 9280-0003 PAPER KAE 10 8546

32421A ONLY Interface Board Assembly, 30312-60002, Sheet 2 of 2

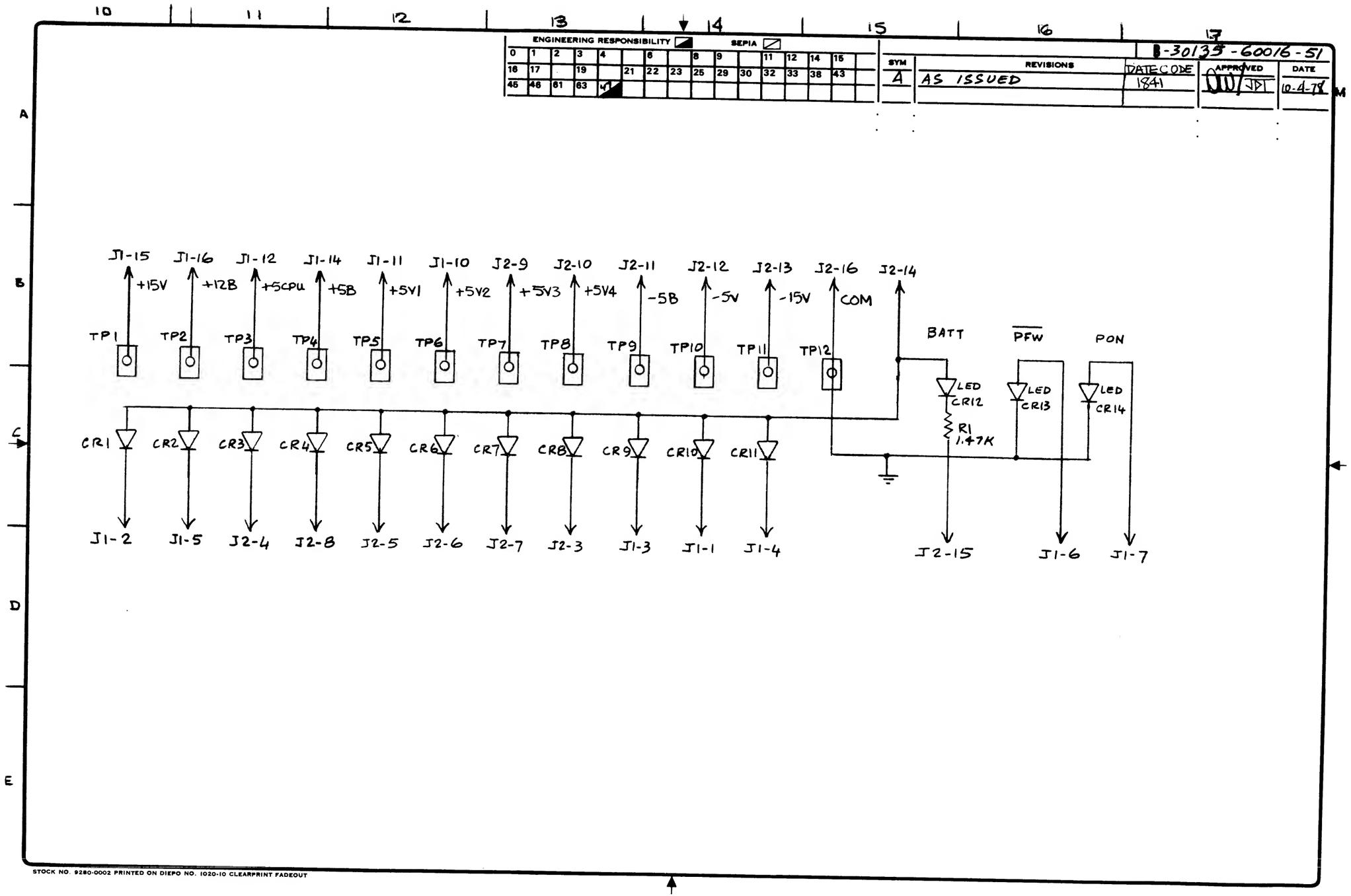

32435A ONLY Power Control Display PCA, 30135-60016, Sheet 1 of 2

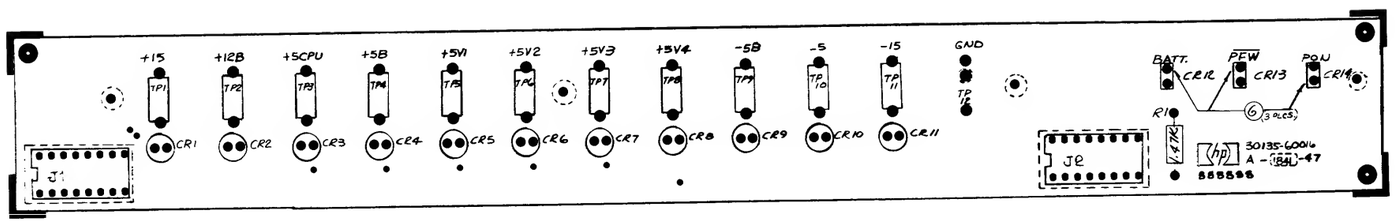

NOTES

1. UNLESS OTHERWISE SPECIFIED:
   ALL RESISTANCE IN OHMS 1/8W 1%.
   ALL LEDS ARE 1990-0486
   ALL TEST POINTS ARE 1251-1395

32435A ONLY Power Control Display PCA, 30135-60016, Sheet 2 of 2

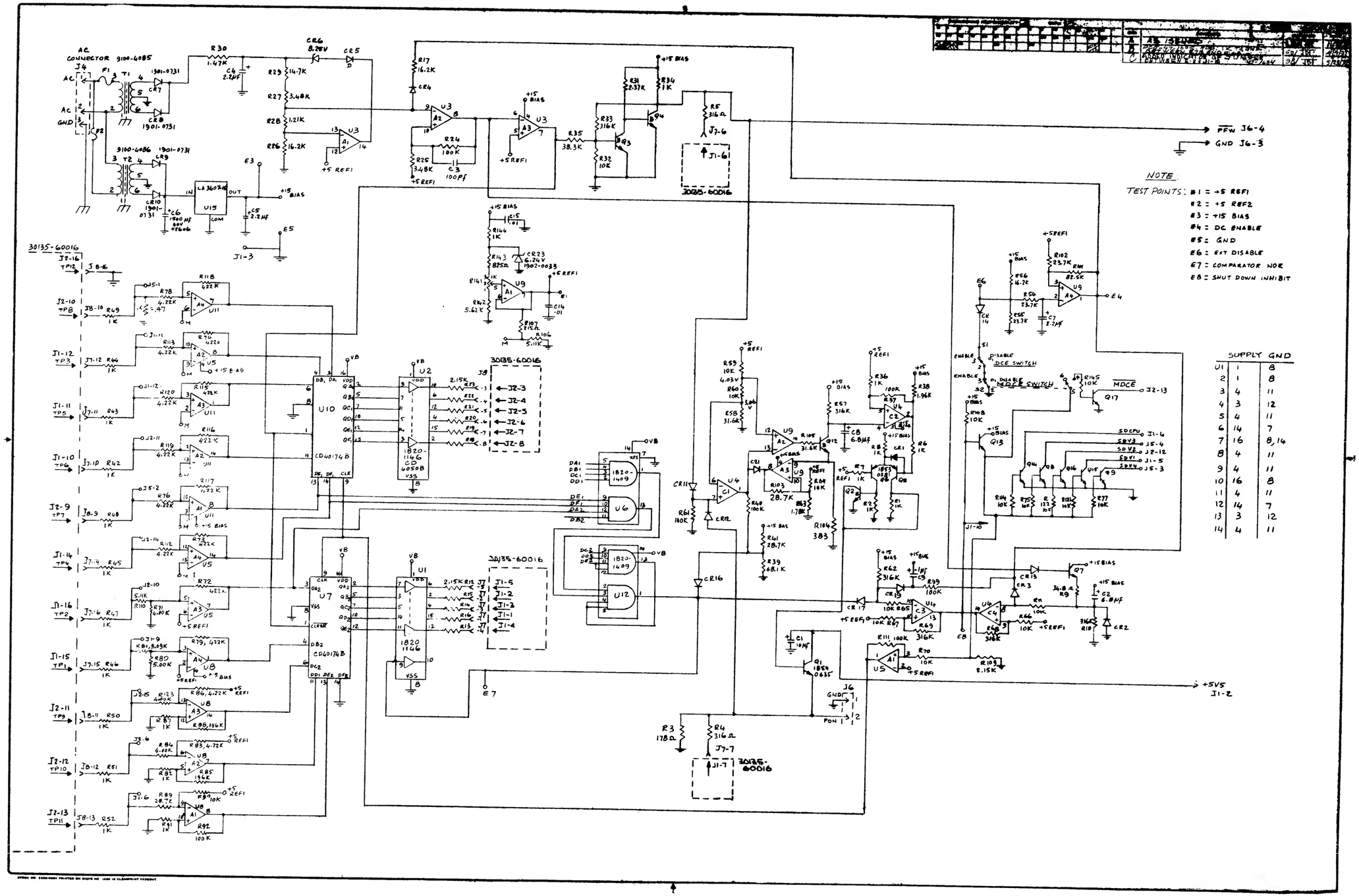

32435A ONLY DC Power Control PC, 30135-60017, Sheet 1 of 3

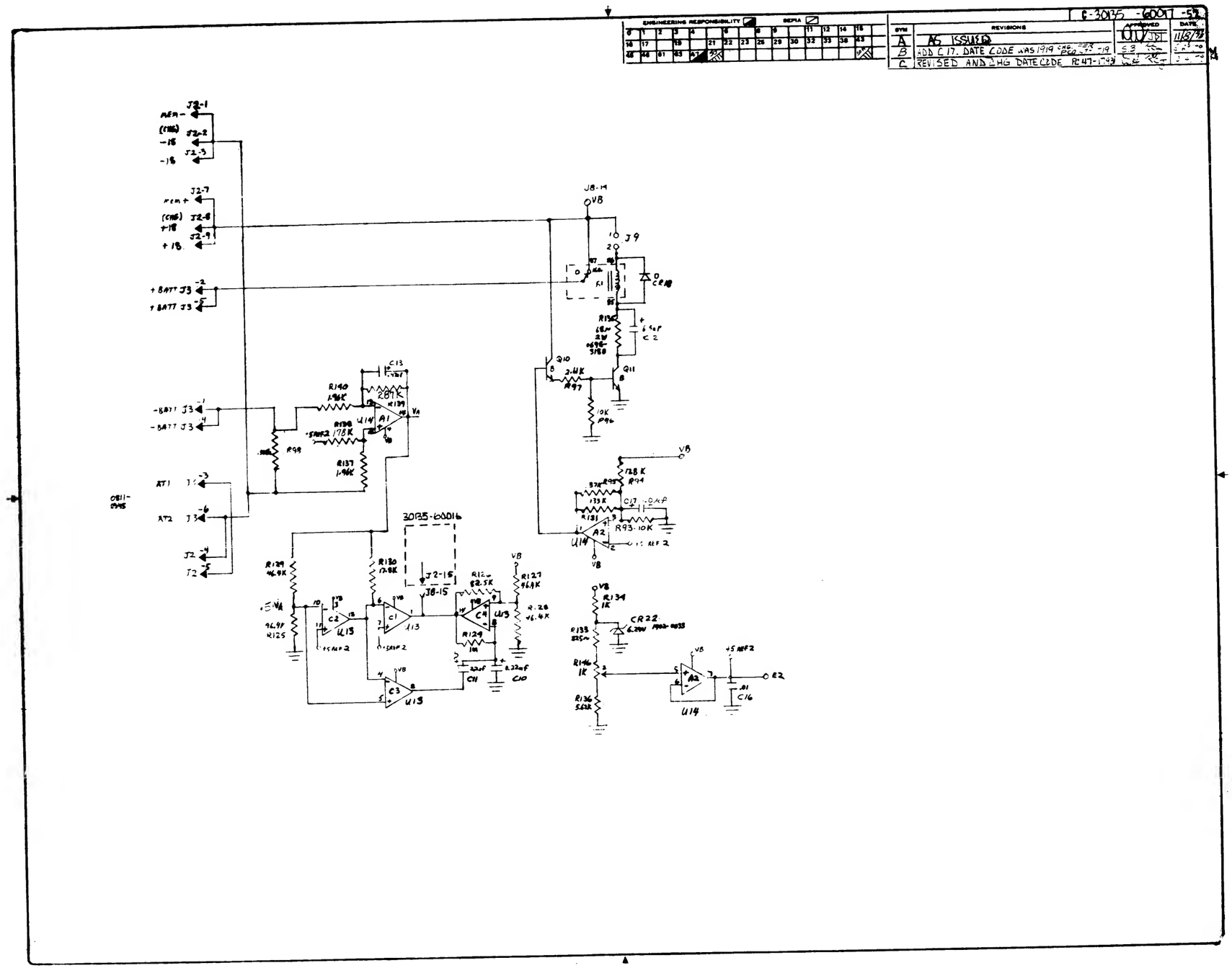

32435A ONLY DC Power Control PC, 30135-60017, Sheet 2 of 3

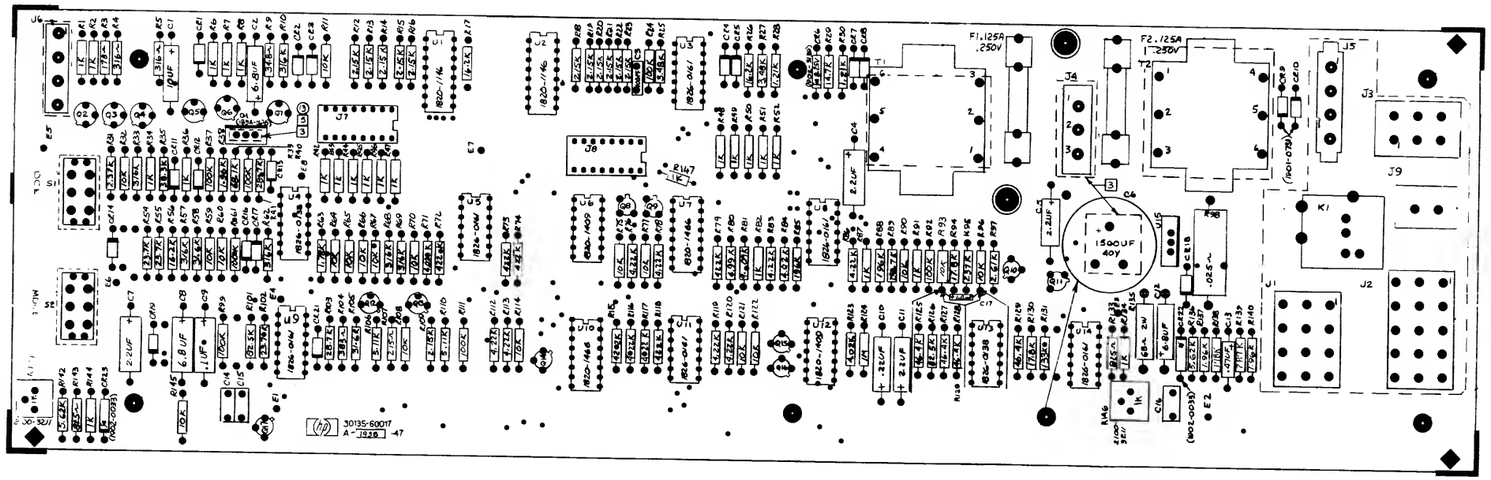

NOTES:

1. UNLESS OTHERWISE SPECIFIED
   ALL RESISTANCE IN OHMS
   ALL RESISTORS ARE 1/8 W 1%
   ALL DIODES ARE 1901-1088
   ALL TRANSISTORS ARE 1854-0477

32435A ONLY DC Power Control PC, 30135-60017, Sheet 3 of 3